# SERVICE MANUAL

# LS200 Procedure Light

MODELS: 44200...Domestic
44202...Europe
44204...U.K.
44206...Australia
44210...Wall Mount
44250...Mobile Stand

Copyright 1995
Welch Allyn Co.

4341 State Street Road
P.O. Box 220
Skaneateles Falls, NY 13153-0220
Originator: RJS
ECN# 5-29347 10/94

TABLE OF CONTENTS


| | |
|---|---|
| FORWARD | 3 |
| SAFE SERVICE | 4 |
| INDEX: ELECTRICAL FAILURE/CAUSE/CORRECTIVE ACTION | 5 - 7 |
| MECHANICAL FAILURE/CAUSE/CORRECTIVE ACTION | 8 - 11 |
| INDEX: REMOVAL/REPLACEMENT (R & R) PROCEDURES | 12 |
| REMOVAL/REPLACEMENT PROCEDURES | 13 - 31 |


APPENDIX


| | |
|---|---|
| SERVICE PARTS LIST AND DIAGRAM | AA |
| WIRING DIAGRAM/SCHEMATIC | BB |
| TOOLS (COMMON & SPECIAL) | CC |
| PRODUCT UP-DATES | DD |
| PRODUCT DESCRIPTION | EE |

# FORWARD

This SERVICE MANUAL provides technical assistance to Welch Allyn repair technicians for diagnosing, repairing, and testing the WELCH ALLYN LS200 PROCEDURE LIGHT. The manual's main content areas cover: troubleshooting, step by step repair, adjustment, and re-test procedures. The repair 'TASK' procedures (R & R .. Removal and Replacement) are written to provide quick and easy reference for repair technicians of different experience levels. Required specifications and materials are listed at each step where applicable. When reading this manual for the first time, have an LS200 readily available for reference and practice. Read each complete repair step on what to do (task statement), plus how to do it (technique statement) before starting the repair or practice.

Training for the LS200 should consist of detailed demonstrations of required repair tasks, practice on LS200'S using repair tooling and materials. Assess skill development through observation of trainee practice on actual equipment. Set up sessions to allow the trainee to practice the use of the diagnostic, repair, adjustment, and re-testing procedures found in this manual. The ability of the technician to develop and retain new skills is in great part dependent on well prepared training exercises. Each trainee must have the opportunity to practice the procedure(s) after it has been demonstrated by the instructor.

More detailed background product information is found in the APPENDIX section and as such will be a critical element in a comprehensive service training program for technicians.

## I M P O R T A N T :

Welch Allyn part numbers and 'M' (material) numbers appearing in this manual are for the purpose of familiarizing new technicians with Welch Allyn documentation conventions. Order replacement parts, as always, by referencing your latest bill of materials, parts catalog and assembly drawings. Part number changes, product updates, or new test procedures should be noted on the appropriate page of this manual by the manual owner. Notices announcing these changes should be attached to PRODUCT UPDATES APPENDIX.

WEAR EYE PROTECTION WHEN SERVICING THIS PRODUCT !

*** SAFE SERVICE ***

DISCONNECT power cord from A.C. power source before initial disassembly of LS200 Light. OBSERVE cautions / warnings in owners manual and printed on the product itself.

COMPLY with all safety codes and practices for this type of product. COMPLY with all safety regulations at your work place.

PERFORM all recommended Welch Allyn service test procedures to assure the LS200 meets all requirements safely and reliably.

EXAMINE AND REPAIR OR REPLACE as required, any and all worn or questionable wiring, components, connections, connectors, warning labels, insulation and other items necessary for the continued safe operation of this product.

DO NOT TOUCH halogen lamps or nearby parts during or immediately after operation. WAIT AT LEAST TWENTY MINUTES (20 MIN.) BEFORE TOUCHING HALOGEN LAMPS OR METAL NEAR THE LAMP(S). VERY HIGH TEMPERATURES will cause severe burns! Fractured or broken lamps may cause injury. To prevent cuts, REMOVE such lamps by HOLDING them with a cloth or wear work gloves. WEAR SAFETY GLASSES!

DO NOT LOOK DIRECTLY AT, TOUCH OR SPRAY LIT halogen lamps.

*** QUALITY SERVICE ***

MODIFY your SERVICE Manual by notating changes and revisions of part numbers and procedures. Enter this information on the appropriate page...and include a copy of the notification in your Appendix "Product Updates".

READ AND UNDERSTAND customer comments and complaints on accompanying documentation (P.O. or other correspondence).
IF AN INJURY OR ILLNESS TO PATIENT OR USER, OR HAZARDOUS MALFUNCTION HAS OCCURRED OR IS SUSPECTED, DO NOT DISASSEMBLE, REASSEMBLE, ALTER OR REPAIR THE PRODUCT IN ANY WAY...INSTEAD, GIVE THE UNIT AND ALL ACCOMPANYING PAPERWORK TO YOUR REPAIR SUPERVISOR. Appropriate action per approved Welch Allyn policy will be taken.

When performing a complete inspection, LOOK for : missing parts, product defects, damage, tampering, unsafe condition of wiring or any component. ENTER all findings and test data along with repair status in the appropriate file.

Most of the repairs can be performed on a foam covered work bench. Place the LS200 in holding fixture for repairs. Take all actions to prevent scratching the bezel.

INDEX: FAILURE / CAUSE
LS200 ELECTRICAL

| COMPLAINT / (CONDITION): | | CAUSE / CORRECTIVE ACTION: |
|---|---|---|
| Less than 3 lamps light. | .... | lamp is burned out. REPLACE PN 06400 |
| | .... | lamp not seated correctly. SEAT lamp. (3 lamps are wired in parallel) |
| | .... | lamp socket defective. REPLACE. |
| None of the lamps illuminate (SWITCH IS "ON", POWER CORD PLUGGED IN) | .... | no voltage at A.C. source. TRY other power outlet. RESTORE power. |
| | .... | power cord loose. RESTORE connections |
| | .... | fuse(s) blown. CHECK for short to ground or other high current path such as a line to line short. RESTORE circuit to specifications prior to energizing LS200. REPLACE fuses. |
| WARNING: ALLOW LAMPS TO COOL FOR at least 20 MINUTES. | ... | burned out lamps. CHECK lamps...are they correct part# for this Light. REPLACE lamp (Welch Allyn PN 06400). |
| | .... | defective (failed open) switch. CHECK voltage across switch pole pairs in closed position. If full transformer voltage is present, then the switch is "OPEN" electrically. REPLACE defective switch. TEST. |
| | .... | defective transformer, "OPEN" primary or secondary windings or defective or "failed OPEN" thermal protection* device in transformer primary winding for international LS200. CHECK for continuity in transformer primary winding. REPLACE if 'open'. *"non-resetting type" does not reset upon cooling. |
| | .... | "OPEN" circuit in power connector. REPLACE defective component. |
| | .... | power cord damaged. REPLACE cord. |

INDEX: FAILURE / CAUSE
LS200 ELECTRICAL

| COMPLAINT / (CONDITION): | | CAUSE / CORRECTIVE ACTION: |
|---|---|---|
| Light output is very | .... | Wrong lamp(s) (voltage rating above low, all lamps lit. 12 volts). REPLACE with PN 06400. |
| | .... | lamp(s) not properly aligned in holder. INSPECT, ADJUST. |
| | .... | bezel not installed properly. CHECK AND ALIGN three clear round sections of bezel directly over the lamps. |
| | .... | dirty glass filters on bezel assembly. CLEAN. |
| | .... | defective transformer. MEASURE secondary voltage. (at transformer: input:120V 60HZ/ output:12.6 VAC, +/-.2 VAC @ 5 Amps OR at lamp holder: 12.0 +/-.3 VAC) See drawing #441048. Low output indicates defective transformer. However, even a good transformer will have low output when provided with low input voltage. MEASURE both voltages. Light intensity is proportional to current passing through lamp filament. |
| | .... | glass is damaged. REPLACE glass. |
| | .... | angle bracket bent. REPLACE angle bracket. |
| | .... | lamps are defective or damaged. REPLACE lamps. |

INDEX: FAILURE / CAUSE
LS200 ELECTRICAL

| COMPLAINT / (CONDITION): | | CAUSE / CORRECTIVE ACTION: |
|---|---|---|
| Illumination is intermittent (light 'flickers') as arm is articulated. (Customer should send LS200 to Welch Allyn for service.) | .... | loose connections, defective wiring or lamp(s) not seated fully in holder. TROUBLESHOOT / RESTORE connections /REPLACE defective parts. |
| Switch produces arc or flash when operated. (Customer should send LS200 to Welch Allyn for service.) | .... | switch is defective or wiring connections are loose / intermittent TROUBLESHOOT, REPLACE switch, connectors. |
| Fails Dielectric strength | .... | transformer has electrical insulation failure/current leak. REPLACE transformer. |
| Lamps blow very quickly, less than 30 seconds. incorrect bulbs. | .... | transformer output voltage is too high. Find cause, ex.: wrong transformer, input voltage too high, |

T E C H N I C I A N  N O T E S :

INDEX: FAILURE / CAUSE
LS200 MECHANICAL

D E F I N I T I O N S

To simplify text, numbers are used for the names of the joints on the LS200. See figure 1 on page 9. This page of information is for referencing the joints on the LS200 and giving a general description of required adjustments. This page is not service instructions.

| JOINT NUMBER: | | DESCRIPTION: |
|---|---|---|
| Yoke/Housing joint (# 1 joint) | ..... | The crescent shaped part is the yoke. It holds the lamp housing. This is a technician adjustable friction joint. Adjust friction to keep lamp housing in position when moved. Tighten/loosen lamp housing 15/16" nut on pivot bolt. (Secure this nut with Loctite #242, M30338.) REMOVE flakes of Loctite which may be in lamp housing. This is the only joint that is lubricated (Dow Corning #7 release compound, M11175) |
| Yoke-arm joint | .... | The yoke is attached to the upper (long) (# 2 joint) arm at the 'yoke-arm' joint # 2. (User can adjust this friction joint by tightening or loosening slotted set screw in arm near joint. This set screw is secured with Loctite #222, M30375.) To replace components of joint # 2, remove short arm. (See sect. I.) |
| Arm joint (# 3 joint) | .... | The two arm sections are joined at the adjustable 'arm' joint. (User can adjust this friction joint by tightening or loosening the black knob.) To replace or repair it, you must remove the lower arm and release spring tension. (See sect.J.) |
| Universal connector (# 4 joint) | .... | The lower (short) arm attaches to the mounting option (pole or wall mount) at the 'universal connector' joint. (User can adjust this friction joint by tightening or loosening the slotted set screw in the arm near this joint. Do not use Loctite on this set screw.) |
| Mount arm joint (# 5 joint) | .... | The mount arm attaches to the wall mount bracket at the 'mount arm' joint. This joint is not adjustable. Disassembled by removing 3 cap screws underneath wall mount bracket. |

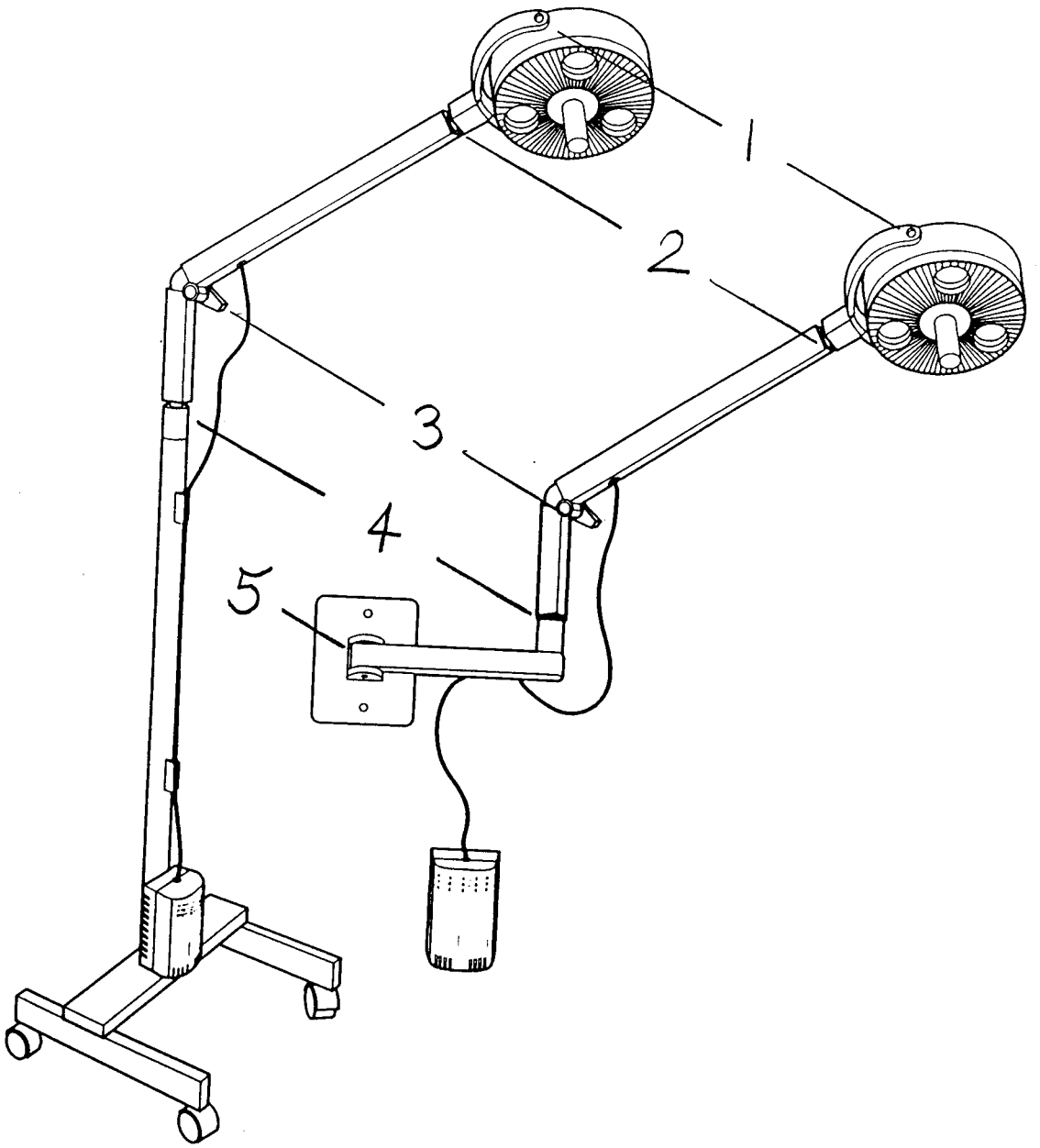


FIGURE 1
JOINTS

INDEX: FAILURE / CAUSE
LS200 MECHANICAL

| COMPLAINT / (CONDITION): | | CAUSE / CORRECTIVE ACTION: |
|---|---|---|
| Joints are stiff.<br>Excessive resistance to movement at below listed joint(s): | | |
| #1, 2, 3, 4, 5 | ..... | foreign matter in joint. DISASSEMBLE, CLEAN, REASSEMBLE, ADJUST. |
| #2, 4 | ..... | set screw too tight for #2, #4. LOOSEN and ADJUST per instructions in owners manual. |
| #3 | ..... | arm adjustment knob is too tight. LOOSEN to RESTORE desired holding. |
| #1 | ..... | pivot nuts too tight. LOOSEN nuts. |
| LS200 does not maintain position: | | |
| Generally | ..... | intended joint friction (other than joint #1 which is supposed to be lubricated) possibly compromised by lubrication. DISASSEMBLE, CLEAN REPLACE brake washers in affected joints and components of joint #3. DO NOT LUBRICATE joints. Only joint #1 requires lubrication with Dow Corning #7 release compound, Welch Allyn M#11175. |
| | ..... | set screw at #2 is loose or missing. TIGHTEN / REPLACE. |
| | ..... | set screw at #4 is loose or missing. TIGHTEN / REPLACE. |
| at #5 joint | ..... | wall bracket is not mounted per instructions. CHECK with a level. REMOUNT within 2 degrees of level per instructions in owners manual. |
| | ..... | cap head screws are loose or missing. |
| Unit sways or wobbles:<br>Entire arm and light head wobbles. | ..... | mounting option attachment screw is loose or missing. INSTALL screw and TIGHTEN. |
| (these are customer items) | ..... | wall bracket option is not secure. ATTACH to wall at stud with approved screws only. |
| | ..... | joint #3 knob too loose. TIGHTEN. |
| | ..... | pole is loose on mobile stand. REASSEMBLE according to instructions. ALIGN the small metal post in the stand with the hole in the pole. |

INDEX: FAILURE / CAUSE
LS200 MECHANICAL

| COMPLAINT / (CONDITION): | | CAUSE / CORRECTIVE ACTION: |
|---|---|---|
| Light head wobbles. | ..... | clear plastic cover on front of light head is not put on properly. REFER to lamp replacement instructions to VERIFY that plastic cover tabs are aligned with those on the white plastic light housing. REMOVE and RE-INSTALL clear plastic cover. |
| Power supply wobbles. | ..... | power supply attachment points are not secure. TIGHTEN this connection by PUSHING the power supply housing down onto the mounting screws as far as it will go. |
| Mobile stand is difficult to move. | ..... | casters are locked. UNLOCK casters when moving unit. |
| | ..... | wheel(s) are bound up with foreign material such as string. CLEAR obstruction. |
| LS200 is noisy when articulated. | ..... | some type of cleaning agent or solvent may have gotten into joint(s). ALLOW it to dry and DO NOT LUBRICATE. |
| | ..... | foreign material has built up in the joint. WIPE material out of joints. |
| | ..... | the heat shrink tubing over the spring is not in place. REPOSITION to eliminate sound. |
| LS200 makes clicking sound when upper arm is raised and/or lowered | ..... | strap attached to spring is interfering with mandrel assembly. Replace strap and any other worn parts in joint #3. REASSEMBLE according to instructions in section K. |

END LS200 MECHANICAL TROUBLESHOOTING
T E C H N I C I A N  N O T E S :

INDEX: REMOVAL AND REPLACEMENT (R & R) PROCEDURES

CAUTION : DISCONNECT LS200 FROM A.C. POWER SOURCE
BEFORE SERVICING TO AVOID ELECTRICAL SHOCK HAZARD


| | Component: | | Page: |
|---|---|---|---|
| A | Bezel assembly | - - - - - - | 13 |
| B | Halogen lamps | - - - - - - | 14 |
| C | Fuses | - - - - - - | 15 |
| D | IEC connector | - - - - - - | 16 |
| E | Power switch | - - - - - - | 17 |
| F | Transformer | - - - - - - | 18 |
| G | Lamp holder | - - - - - - | 19 |
| H | Lamp housing | - - - - - - | 20-21 |
| I | Yoke | - - - - - - | 22-25 |
| J | Joint #3 (Main hinge) | - - - - - - | 26-27 |
| K | Cable | - - - - - - | 28-29 |
| L. | Joint #4 (Universal connector) | - - - - - - | 29 |
| M. | Mobile stand | - - - - - - | 30 |
| N. | Wall mount | - - - - - - | 30-31 |


T E C H N I C I A N  N O T E S :

12

CAUTION: DISCONNECT LS200 FROM POWER SOURCE BEFORE SERVICING.

A BEZEL ASSEMBLY (R & R) PN 441145-501

CAUTION: ALLOW HOT LAMPS TO COOL FOR 20 MINUTES BEFORE REMOVING BEZEL.

A 1. UNPLUG LS200 AND REMOVE HANDLE.
(ALSO REFER TO OPERATING INSTRUCTIONS PN 441118-1ML.) REMOVE POWER CORD FROM A.C. POWER SOURCE. LAY LS200 DOWN WITH HANDLE FACING UP. UNSCREW THE HANDLE COUNTER CLOCKWISE. REMOVE HANDLE. UNSCREW THE TETHER RETAINING NUT AND REMOVE THE TETHER.

A 2. REMOVE BEZEL.
SLIDE THE BEZEL OFF OF THE THREADED ROD.

A 3. REPLACE BEZEL.
INSPECT LAMPS, REFLECTORS, SHROUD, BEZEL, AND GLASS FOR SMUDGES, AND DUST. CLEAN BEFORE REASSEMBLING. DO NOT USE SOLVENTS TO CLEAN BEZEL. PUT BEZEL OVER LIGHT HOUSING WITH THREE TABS OVER THREE RECESSES IN THE LAMP HOUSING. ALIGN TABS ON BEZEL WITH TABS ON LAMP HOUSING. PLACE THE TETHER ONTO THE THREADED ROD OF THE CENTRAL BRACE. THREAD THE NUT ONTO THE THREADED ROD AND TIGHTEN HAND TIGHT. THREAD THE HANDLE ONTO THE THREADED ROD UNTIL IT CONTACTS THE BEZEL. TIGHTEN THE HANDLE SLIGHTLY UNTIL THE BEZEL IS FIRMLY IN PLACE.

A 4. VERIFY REPAIR.
PLUG LS200 INTO MAINS AND TURN SWITCH TO ON POSITION. ALL THREE LAMPS SHOULD BE LIT. TURN OFF. ALL LAMPS MUST TURN OFF.

T E C H N I C I A N N O T E S :

_____

_____

_____

_____

_____

_____

CAUTION: DISCONNECT LS200 FROM POWER SOURCE BEFORE SERVICING.

B HALOGEN LAMP REMOVAL AND REPLACEMENT (R & R) PN 06400
(OSRAM # 44860sp or 44860nsp, [ 12V/20W/12 degree spread ])

D O N O T T O U C H H O T L A M P !

WARNING: ALLOW LAMP TO COOL OFF FOR AT LEAST 20 MINUTES BEFORE TOUCHING LAMP OR SURROUNDING METAL PARTS.

NOTE: REFER TO LAMP CHANGING DIAGRAMS IN OWNERS MANUAL #44118ML.

B 1. UNPLUG LS200 AND REMOVE BEZEL.
REMOVE POWER CORD FROM A.C. POWER SOURCE. TURN THE UNIT FOR EASY ACCESS TO THE HANDLE AND UNSCREW HANDLE COUNTER CLOCKWISE. LET THE BEZEL SWING AWAY TO EXPOSE LAMPS AND LAMP SOCKETS. THE BEZEL WILL BE SUSPENDED BY THE TETHER.

D O N O T T O U C H H O T L A M P
O R M E T A L P A R T S N E A R L A M P S !

B 2. REMOVE LAMP.
AFTER A 'COOLING DOWN' PERIOD OF AT LEAST 20 MINUTES, LOCATE AND PULL THE LAMP HOLDING LEVER TO RAISE THE BASE OF THE LAMP OUT OF ENGAGEMENT WITH THE LAMP SOCKET. PULL THE LAMP HOLDING LEVER TOWARD THE BACK OF THE UNIT UNTIL LEVER IS ALMOST VERTICAL. REMOVE THE EXPIRED LAMP AND RETURN THE LEVER TO ITS FORMER POSITION.

CAUTION: WEAR A PROTECTIVE GLOVE WHEN REMOVING FRACTURED LAMPS. REMOVE BROKEN LAMP FRAGMENTS FROM THE LAMP HOUSING.

B 3. REPLACE WITH NEW LAMP PN 06400.
RETURN THE LAMP HOLDING LEVER TO ITS ORIGINAL POSITION.

NOTE: HOLD THE LAMP ON THE OUTSIDE SURFACES ONLY. FINGER GREASE OR OTHER CONTAMINANTS WILL DARKEN THE QUARTZ ENVELOPE CAUSING DISCOLORATION AND PREMATURE FAILURE OF THE REPLACEMENT LAMP. VERIFY PROPER ALIGNMENT OF PINS IN LAMP SOCKET. PRESS DOWN INTO FULL ENGAGEMENT WITH LAMP SOCKET. LAMP WILL SNAP INTO PLACE.

B 4. INSTALL BEZEL.
ALIGN THE TABS ON THE BEZEL WITH THE TABS ON THE LAMP HOUSING AND MAKE SURE THAT THE THREE CLEAR WINDOWS IN THE BEZEL LINE UP WITH LAMPS. WHILE HOLDING BEZEL IN PLACE WITH ONE HAND, SCREW THE HANDLE ONTO THE THREADED SHAFT. TIGHTEN THE HANDLE UNTIL IT IS FIRMLY IN PLACE.

B 5. TEST TO VERIFY SAFE OPERATION.
CONNECT TO POWER SOURCE. PLACE THE POWER SWITCH IN THE 'ON' POSITION. ALLOW NEW LAMPS TO OPERATE FOR FIVE MINUTES TO 'BURN IN'.

CAUTION: DISCONNECT LS200 FROM POWER SOURCE BEFORE SERVICING.

C FUSES (TWO) R & R. DOMESTIC: 1A,250V PN 236706-3907
INTERNATIONAL: 0.5A,250V PN 236706-3114

CAUTION: IF AN LS200 HAS BEEN RETURNED FOR FUSE REPLACEMENT, DO NOT JUST REPLACE FUSES AND PLUG IN TO TEST. INSTEAD:

1. LOCATE AND ELIMINATE THE SHORT CIRCUIT BY TESTING TRANSFORMER OR WIRING. DETERMINE THE CAUSE OF THE PROBLEM IF POSSIBLE, ex.: LINE SURGE. WHAT COMPONENT(S), IF ANY, WERE DAMAGED?
2. RESTORE THE CIRCUIT TO SPECIFICATIONS BEFORE REPLACING FUSE AND ENERGIZING.

* LOCATE AND ELIMINATE SHORT CIRCUITS (LINE TO LINE OR LINE TO GROUND ) BEFORE CONNECTING LS200 TO MAINS. INSPECT WIRE INSULATION AND COMPONENTS FOR BURN AND SMOKE MARKS. REPLACE ALL DAMAGED COMPONENTS TO RESTORE CIRCUIT TO SPECIFICATIONS. INSPECT TRANSFORMER ASSEMBLY FIRST.

C 1. REMOVE FUSE DRAWER.

DISCONNECT LS200 FROM POWER SOURCE. REMOVE POWER CORD FROM UNIT POWER CORD RECEPTACLE. INSERT THE FLAT BLADE OF A SMALL SCREWDRIVER (1/8") INTO SLOTS ON SIDES OF THE FUSE DRAWER. PRY BOTH LATCHES AND SLIDE THE FUSE DRAWER OUT OF THE RECEPTACLE.

C 2. REMOVE FUSES FROM FUSE DRAWER.

PULL BOTH FUSES FROM FUSE DRAWER AND VERIFY THAT ONE OR BOTH ARE ELECTRICALLY 'OPEN' (BLOWN). NOTE THE FUSE RATING. THIS IS IMPORTANT SINCE THE FUSES MAY HAVE BLOWN BECAUSE THEIR AMP RATING WAS BELOW THE REQUIRED AMP RATING FOR THIS PRODUCT. THUS, THE FUSES WERE AT FAULT, NOT THE LS200 CIRCUITS. FUSES OF THE PROPER RATING CAN BE INSTALLED AND THE LAMP TURNED ON FOR A FUNCTIONAL CHECK. FUSES CAN BE CHECKED VISUALLY FOR OPEN FILAMENT. CONTINUITY CAN BE CHECKED WITH AN ANALOG OR DIGITAL VOLT OHM METER D.V.O.M.. OPEN (BLOWN) FUSES HAVE INFINITE RESISTANCE ('OL' SYMBOL INDICATES "OPEN LEADS" FOR MANY DIGITAL VOLT-OHM METERS).

C 3. INSTALL NEW FUSES IN FUSE DRAWER.

INSERT TWO FUSES IN THE RECESSES IN THE FUSE DRAWER. REPLACE BOTH FUSES, EVEN WHEN ONE IS NOT BLOWN (MELTED THROUGH.) ALIGN THE TAB ON THE BOTTOM OF THE FUSE DRAWER WITH THE SLOT IN THE POWER CORD RECEPTACLE. EVENLY INSERT THE FUSE DRAWER INTO HOUSING UNTIL ITS DETENTS LATCH.

C 4. TEST TO VERIFY SAFE OPERATION.

CONNECT LS200 TO POWER SOURCE AND VERIFY THAT ALL THREE LAMPS ARE LIT. CONDUCT HI-POT TEST PER A-02861.

CAUTION: DISCONNECT LS200 FROM POWER SOURCE BEFORE SERVICING.

D IEC CONNECTOR R & R

D 1. REMOVE BACK HOUSING.

DISCONNECT LS200 FROM MAINS. IF MOUNTED ON MOBILE STAND, DETACH TRANSFORMER ASSEMBLY FROM POLE. REMOVE FOUR SCREWS AND REMOVE BACK HOUSING.

D 2. REMOVE IEC CONNECTOR.

DISCONNECT THREE WIRES FROM THE TERMINALS ON THE BACK OF THE IEC CONNECTOR (POWER RECEPTACLE). LIFT IEC CONNECTOR OUT OF THE FRONT HOUSING. RE-USE THE OLD FUSE TRAY IF IT IS NOT DAMAGED. NEW FUSES OF THE CORRECT RATING SHOULD BE USED.

D 3. INSTALL REPLACEMENT IEC CONNECTOR.

ALIGN REPLACEMENT POWER RECEPTACLE WITH THE GROUND (CENTER) TERMINAL AT THE BOTTOM OF THE HOLE IN THE CHASSIS. PRESS RECEPTACLE INTO HOUSING CUTOUT. CONNECT WIRES PER ASSEMBLY DRAWING. CONNECT THE BLACK WIRES TO THE IEC CONNECTOR AT FI AND F2. THE CENTER TERMINAL IS THE GROUND TERMINAL...CONNECT THE GREEN WITH YELLOW STRIPE (GROUND WIRE) TO THE GROUND TERMINAL.

D 4. ATTACH BACK HOUSING OF POWER SOURCE.

MAKE SURE THE STRAIN RELIEF AND IEC CONNECTOR ARE IN THE NOTCHES IN THE FRONT HOUSING. BE CAREFUL NOT TO PINCH WIRES ON SECONDARY SIDE WHILE CLOSING HOUSING. POSITION THE COVER ONTO THE POWER SUPPLY HOUSING AND FASTEN IT WITH FOUR SCREWS.

D 5. TEST TO VERIFY SAFE OPERATION.

CONNECT LS200 TO POWER SOURCE AND VERIFY THAT ALL THREE LAMPS ARE LIT. CONDUCT HI-POT TEST PER A-02861.

T E C H N I C I A N N O T E S :

_____

_____

_____

_____

CAUTION: DISCONNECT LS200 FROM POWER SOURCE BEFORE SERVICING.

E POWER SWITCH R & R

NOTE: IT IS NOT NECESSARY TO DISASSEMBLE THE LAMP HOUSING TO REPLACE THE SWITCH.

E 1. REMOVE SWITCH.

APPLY A SMALL PIECE OF MASKING TAPE TO THE LAMP HOUSING ALONG THE EDGES OF THE SWITCH TO PROTECT THE SURFACE FINISH OF HOUSING DURING SWITCH REMOVAL. PULL THE OLD SWITCH OUT OF THE LIGHT HOUSING BY PRYING UPWARDS AT THE END OF THE SWITCH WITH A THIN EDGE SUCH AS A PUTTY KNIFE.

E 2. DISCONNECT WIRES FROM SWITCH.

UNPLUG ALL FOUR (4) WIRES FROM THE BOTTOM OF THE SWITCH.

E 3. INSTALL NEW SWITCH.

ATTACH WIRES AND PRESS SWITCH INTO LAMP HOUSING, MAKING SURE THAT THE LAMP SYMBOL ON THE TOP OF THE SWITCH IS TOWARDS THE WORD “WELCH” OF THE WELCH ALLYN NAME ON THE FRONT OF THE HOUSING. THESE WIRES CONDUCT A.C. CURRENT AND AS SUCH MAY BE ATTACHED TO THE SWITCH IN EITHER POSITION. REFER TO ASSEMBLY DRAWING NO. 441013.

E 4. VERIFY REPAIR.

CONNECT LS200 TO POWER SOURCE AND OPERATE THE SWITCH APPROXIMATELY 5 TIMES TO DETERMINE THAT THE SWITCH IS OPERATING PROPERLY. VERIFY THAT ALL THREE LAMPS LIGHT.

T E C H N I C I A N N O T E S :

CAUTION: DISCONNECT LS200 FROM POWER SOURCE BEFORE SERVICING.

F TRANSFORMER ASSEMBLY R & R.

NOTE: TO CHECK FOR DEFECTIVE TRANSFORMER, MEASURE:input (120V) 60HZ AND OUTPUT (12.6 VAC,+/-.2 VAC @5 Amps.) SEE DWG# 441048. LOW OUTPUT INDICATES A DEFECTIVE TRANSFORMER. HOWEVER, EVEN A GOOD TRANSFORMER WILL PRODUCE LOW OUTPUT IF INPUT VOLTAGE IS BELOW REQUIREMENTS. MEASURE BOTH. LIGHT INTENSITY IS PROPORTIONAL TO CURRENT PASSING THROUGH THE LAMP FILAMENT.

F 1. REMOVE BACK HOUSING.

DISCONNECT LS200 FROM MAINS. REMOVE TRANSFORMER ASSEMBLY FROM POLE OF MOBILE STAND IF SO EQUIPPED. REMOVE FOUR SCREWS AND REMOVE BACK HOUSING.

F 2. REMOVE OLD TRANSFORMER.

DISCONNECT FIVE (5) TRANSFORMER WIRES FROM POWER CONNECTOR AND SECONDARY CABLE (GRAY CORD). REMOVE TRANSFORMER STRAPS BY UNSCREWING FOUR PHILLIPS HEAD SCREWS. LIFT TRANSFORMER OUT OF FRONT HOUSING.

F 3. INSTALL REPLACEMENT TRANSFORMER.

ALIGN TRANSFORMER (WITH WIRES “DOWN”) WITH THREE (3) PRIMARY WIRES TOWARDS THE POWER CONNECTOR. THESE WIRES MUST PASS BETWEEN THE RIBS OF THE TRANSFORMER SUPPORT. ALIGN STRAPS SO THAT HOLES IN STRAPS MATCH WITH HOLES IN TRANSFORMER. SECURE THE TRANSFORMER WITH TWO STRAPS AS SHOWN ON ASSEMBLY DRAWING #441019, AND FOUR STRAP-HOLDING SCREWS. TIGHTEN SCREWS.

F 4. RESTORE ELECTRICAL CONNECTIONS.

CONNECT SPADE CONNECTORS OF TRANSFORMER ‘PRIMARY’ WIRES TO TERMINALS OF POWER CONNECTOR AS SHOWN IN ASSEMBLY DRAWING. BUNDLE THE THREE LINE SIDE WIRES TOGETHER WITH A WIRE TIE. CONNECT SECONDARY TRANSFORMER WIRES TO CABLE.

F 5. ATTACH BACK HOUSING OF POWER SOURCE.

MAKE SURE THE STRAIN RELIEF AND IEC CONNECTOR ARE IN PLACE. PLACE THE COVER ONTO THE POWER SUPPLY HOUSING BEING CAREFUL NOT TO PINCH WIRES BETWEEN THE CASES. FASTEN WITH FOUR (4) SCREWS.

F 6. TEST TO VERIFY SAFE OPERATION.

CONNECT LS200 TO POWER SOURCE AND VERIFY THAT ALL THREE LAMPS ARE LIT. CONDUCT HI-POT TEST PER A-02861.

T E C H N I C I A N N O T E S :

CAUTION: DISCONNECT LS200 FROM POWER SOURCE BEFORE SERVICING.

G LAMP HOLDER R & R

G 1. REMOVE BEZEL.
(ALSO REFER TO PG.8 OPERATING INSTRUCTIONS PN441118-1ML) PUT POWER SWITCH IN OFF POSITION AND REMOVE POWER CORD CONNECTOR FROM A.C. POWER SOURCE. LAY UNIT DOWN WITH HANDLE UP. UNSCREW HANDLE COUNTER CLOCKWISE. REMOVE NUT, TETHER AND BEZEL ASSEMBLY.

DANGER! D O N O T T O U C H H O T L A M P S O R H O T L A M P H O L D E R S ! (GLASS AND METAL COMPONENTS RETAIN HEAT EVEN AFTER LAMPS ARE OFF SEVERAL MINUTES.)

G 2. REMOVE COOL LAMP(S).
AFTER A COOLING DOWN PERIOD OF AT LEAST 20 MINUTES, LOCATE AND PULL THE LAMP HOLDING LEVER TO RAISE THE BASE OF THE LAMP OUT OF ENGAGEMENT WITH THE LAMP SOCKET. PULL THE LAMP HOLDING LEVER TOWARD THE BACK OF THE UNIT UNTIL LEVER IS ALMOST VERTICAL. REMOVE EXPIRED LAMP.

G 3. REMOVE OLD LAMP HOLDER FROM LAMP HOLDER.
UNSCREW THREE SCREWS. CUT THE LAMP HOLDER WIRES AS CLOSE TO THE LAMP HOLDER AS POSSIBLE. LIFT OLD LAMP HOLDER OUT OF LAMP HOUSING.

G 4. ATTACH REPLACEMENT LAMP HOLDER TO LAMP HOUSING.
CONNECT REPLACEMENT LAMP HOLDER WIRES TO OLD WIRES USING BUTT SPLICES PN 488377. KEEPING WIRES OUT FROM UNDER THE LAMP HOLDER, POSITION LAMP HOLDER OVER THREE THREADED BOSSES IN LAMP HOUSING. MAKE SURE THAT THE WIRES DO NOT INTERFERE WITH THE LAMP CHANGING LEVERS. INSERT AND TIGHTEN THREE SCREWS. INSTALL LAMP.

G 5. INSTALL BEZEL ASSEMBLY.
FOLLOW INSTRUCTIONS IN SECTION B-4 PG 14 TO ATTACH THE BEZEL ASSEMBLY TO THE LS200.

G 6. TEST TO VERIFY SAFE OPERATION.
CONNECT TO A.C. POWER SOURCE AND ILLUMINATE LAMP. LET THE UNIT STAY ON FOR FIVE MINUTES TO VERIFY PROPER OPERATION.

T E C H N I C I A N N O T E S :

_____

_____

_____

CAUTION: DISCONNECT LS200 FROM POWER SOURCE BEFORE SERVICING.

H LAMP HOUSING PN 441023-1 R & R.

H 1. REMOVE BEZEL.

UNPLUG LS200 AND REMOVE HANDLE. (ALSO REFER TO OPERATING INSTRUCTIONS PN 441118-1ML.) REMOVE POWER CORD FROM A.C. POWER SOURCE. LAY LS200 DOWN WITH HANDLE FACING UP. UNSCREW THE HANDLE COUNTER-CLOCKWISE. REMOVE HANDLE. UNSCREW THE TETHER RETAINING NUT AND REMOVE THE TETHER. REMOVE BEZEL.

DANGER! D O N O T T O U C H H O T L A M P S O R H O T L A M P H O L D E R S ! GLASS AND METAL COMPONENTS RETAIN HEAT EVEN AFTER THE LAMPS HAVE BEEN TURNED OFF SEVERAL MINUTES.

H 2. REMOVE COOL LAMPS.

AFTER A COOLING DOWN PERIOD OF AT LEAST 20 MINUTES, LOCATE AND PULL THE LAMP HOLDING LEVER TO RAISE THE BASE OF THE LAMP OUT OF ENGAGEMENT WITH THE LAMP SOCKET. PULL THE LAMP HOLDING LEVER TOWARD THE BACK OF THE UNIT UNTIL LEVER IS ALMOST VERTICAL. REMOVE EXPIRED LAMP.

H 3. UNSCREW TWO LAMP HOLDERS NEAR PIVOT BOLTS. (TOP HOLDERS)

MARK LAMP HOLDERS 1-2-3. (REPLACE IN SAME POSITIONS.) REMOVE THREE SCREWS ON EACH OF THE TWO LAMP HOLDERS ADJACENT TO THE POWER SWITCH. THESE 2 LAMP HOLDERS WILL REMAIN IN THE LAMP HOUSING, ATTACHED TO THE WIRES, UNTIL THE LAST LAMP HOLDER AT THE BOTTOM OF THE LAMP HOUSING (BOTTOM LAMP HOLDER) IS REMOVED. DO NOT CUT ANY OF THE LAMP HOLDER WIRES OR SPLICES. UNSCREW BOTH OF THE 4-WAY CONNECTORS.

H 4. REMOVE SWITCH.

UNPLUG ALL FOUR (4) WIRES FROM THE BOTTOM OF THE SWITCH AND CUT OFF THE SPADE CONNECTORS ON THE BLACK AND WHITE WIRES ONLY. CUT RIGHT AT THE CONNECTOR. THESE TWO WIRES ARE THE 12 VOLT SUPPLY FOR THE LAMPS. SQUEEZE DETENTS TOGETHER ON THE BACK OF THE SWITCH AND REMOVE SWITCH FROM LAMP HOUSING. REMOVE FOAM RUBBER INSERT FROM THE YOKE. INSERT A SMALL SCREWDRIVER IN THE YOKE RECESS NEAR THE PIVOT. PUSH THE WA LOGO PLATE OUT OF THE PIVOT RECESS. PUSH THE BLACK AND WHITE POWER WIRES OUT OF THE LAMP HOUSING THROUGH PIVOT BOLTS.

H 5. REMOVE YOKE PIVOT BOLTS AND HARDWARE.

UNSCREW 15/16" NUTS FROM YOKE PIVOT BOLTS. (NUTS HAVE LOCTITE #242 ON THEM.) REMOVE SPACER AND WAVE WASHER. ALIGN FLAT OF THE PIVOT BOLT WITH THE FLAT IN THE HOLE (“D” HOLE) IN THE BRACKET. PRESS BOLTS OUT OF LAMP HOUSING. REMOVE LAMP HOUSING FROM YOKE.

CAUTION: DISCONNECT LS200 FROM POWER SOURCE BEFORE SERVICING.

H LAMP HOUSING ASSEMBLY R & R CONTINUED.....

H 6. REMOVE CENTRAL BRACE.
UNSCREW FOUR (4) PHILLIPS HEAD SCREWS AND REMOVE THE BRACKET FROM THE LAMP HOUSING. REMOVE LAST (BOTTOM) LAMP HOLDER.

H 7. ATTACH EXISTING LAMP HOLDERS AND CENTRAL BRACE. ATTACH BOTTOM LAMP HOLDER WITH 3 PHILLIPS HEAD SCREWS. MAKE SURE THAT WIRES ARE ROUTED ACCORDING TO ABOVE DRAWING. TEMPORARILY ATTACH REMAINING TWO LAMP HOLDERS WITH ONLY ONE SCREW EACH. ATTACH FOUR-WAY CONNECTORS. ATTACH CENTRAL BRACE WITH FOUR PHILLIPS SCREWS. IF A NEW CENTRAL BRACE IS BEING INSTALLED ALONG WITH THE NEW LAMP HOUSING, ATTACH A NEW WARNING LABEL WITH THE SAME ORIENTATION AS THE ORIGINAL.

H 8. ATTACH LAMP HOUSING ASSEMBLY TO YOKE.
FULLY ENGAGE THE LAMP HOUSING IN THE YOKE. INSERT PIVOT BOLTS THROUGH YOKE WITH FLAT SIDE OF BOLT ALIGNED WITH FLAT OF CENTRAL BRACE. SECURE THE LAMP HOUSING WITH THE FOLLOWING ITEMS ASSEMBLED IN SEQUENCE AS LISTED (FOR EACH PIVOT BOLT):
1ST.... INSTALL ONE (1) SPACER (GRAY MATERIAL WASHER),
2ND... INSTALL ONE (1) WAVE WASHER,
3RD... APPLY LOCTITE 242, WA M#30338 TO ONE HALF OF 5 15/16" NUT THREADS,
4TH... ONE 15/16 " NUT. TIGHTEN NUTS EQUALLY, UNTIL ONE THREAD IS VISIBLE ON THE BOLT. ROTATE THE LAMP HOUSING ASSEMBLY BY PULLING WITH A FORCE GAUGE AT THE TOP OF THE CENTER BOLT. ADJUST NUT TIGHTNESS UNTIL A READING OF BETWEEN 1.0 TO 3.0 LBS IS OBTAINED.

H 9. INSTALL THE LAMP HOLDERS AND RESTORE CONNECTIONS.
FASTEN LAMP HOLDERS TO LAMP HOUSING USING THREE #6 PHILLIPS HEAD SCREWS. FEED WIRES THROUGH THE YOKE CHANNEL, PIVOT BOLTS, AND UNDER THE CENTRAL BRACE. GENTLY PULL ON THE BLACK AND WHITE CABLE WIRES AS THEY ENTER LAMP HOUSING TO REMOVE ANY SLACK THAT MIGHT BE PRESENT WHERE THEY PASS THROUGH THE HOLLOW CRESCENT OF THE YOKE. WHEN SLACK IS REMOVED, PRESS WIRES INTO NOTCHES IN THE CRESCENT OR THE FOAM INSERT WILL NOT FIT PROPERLY. INSTALL FOAM IN YOKE. ATTACH WELCH ALLYN LOGOS IN RECESSES OVER PIVOT BOLTS AND ALIGNED WITH PARTING LINE IN YOKE.

H 10. INSTALL SWITCH, LAMPS AND BEZEL.
CRIMP TWO FEMALE QUICK CONNECTS PN 106130-8 ONTO THE BLACK AND WHITE POWER WIRES. PRESS SWITCH INTO CUTOUT OF LAMP HOUSING. ATTACH WIRES TO SWITCH AND INSTALL WIRE TIES PER DWG#441013. INSTALL LAMPS AND BEZEL(SEE B-3 THROUGH B-4.)

CAUTION: DISCONNECT LS200 FROM POWER BEFORE SERVICING.

I YOKE R & R

I 1. REMOVE LAMP HOUSING.
REFER TO SECTION H-1, H-4, AND H-5 ON PAGE 20, BUT LEAVE TWO RED WIRES ATTACHED TO THE SWITCH SINCE IT IS NOT BEING REMOVED.

I 2. REMOVE LOWER ARM.
REMOVE TWO FLAT HEAD PHILLIPS SCREWS NEAREST JOINT #3 (ADJUSTABLE JOINT), AND SLIDE LOWER ARM OFF OF HINGE BRACKET.

I 3. REMOVE STRAP FROM HINGE BRACKET.
UNSCREW 3/8" NUT FROM STUD. USE SLIP JOINT PLIERS TO PULL AND LIFT STRAP FROM STUD. (THIS WILL RELIEVE TENSION ON 2 YOKE SCREWS AND PERMITS DISASSEMBLY OF SPRING BRACKET FROM YOKE STUD.)

I 4. REMOVE STRAIN RELIEF.
COMPRESS STRAIN RELIEF WITH HEYCO TOOL AND REMOVE STRAIN RELIEF FROM LONG ARM.

I 5. UNSCREW YOKE SET SCREW AT JOINT #2.
USE FLAT BLADE SCREWDRIVER TO UNSCREW YOKE SET SCREW.

I 6. REMOVE YOKE FROM JOINT #2.
UNSCREW TWO FLAT HEAD PHILLIPS SCREWS FROM UPPER ARM AT YOKE JOINT. WHILE FEEDING CABLE BACK OUT OF YOKE, PULL YOKE OUT OF JOINT #2. WHEN CONNECTOR PLATE IS ACCESSIBLE, REMOVE IT FROM CONNECTOR BLOCK/YOKE STUD ASSEMBLY. TWO FLAT SPRINGS, BRAKE MATERIAL, AND NYLINERS WILL COME OUT OF CONNECTOR BLOCK. REMOVE END CAPS.

I 7. REMOVE CABLE FROM YOKE.
GENTLY PULL WIRES OUT OF YOKE. DISCARD YOKE.

I 8. ASSEMBLE CONNECTOR BLOCK TO END OF NEW YOKE.
SNAP ONE OF THE END CAPS ONTO THE YOKE. PLACE A SECOND END CAP ONTO STUD FACING OTHER END CAP. INSERT NYLINERS TO EACH END OF CONNECTOR BLOCK BORE. FEED THE BLACK/ WHITE WIRES THROUGH STUD INTO YOKE. PLACE THE STUD PORTION OF THE YOKE INTO THE CONNECTOR BLOCK.

I 9. PLACE THE STRAP/SPRING CONNECTOR PLATE ASSEMBLY ONTO THE CONNECTOR BLOCK/YOKE ASSEMBLY. PLACE THE BRAKE MATERIAL AND TWO FLAT SPRINGS (CURVED SIDE UP) INTO THE OPENING IN THE CONNECTOR BLOCK. POSITION THE CONNECTOR PLATE OVER THE CONNECTOR BLOCK/YOKE STUD ASSEMBLY WITH THE ROTATIONAL STOP OF THE STUD ENGAGED WITH THE CONNECTOR PLATE.

CAUTION: DISCONNECT LS200 FROM POWER SOURCE BEFORE SERVICING.

I YOKE R & R, CONTINUED.....

I 10. SLIDE CONNECTOR BLOCK, YOKE STUD, CONNECTOR PLATE, INTO THE UPPER ARM TUBE. ALIGN THE "KEY" EXTRUSION OF THE INTERIOR OF THE UPPER ARM WITH THE KEY WAY OF THE CONNECTOR BLOCK. MAKE SURE THE END OF THE GRAY CABLE IS PULLED ALL THE WAY INTO THE YOKE SO THAT THE CABLE INSULATION IS VISIBLE WHERE THE SHAFT JOINS THE CRESCENT.

I 11. SECURE CONNECTOR BLOCK TO LONG ARM TUBE WITH TWO SCREWS. FIRST INSTALL THE PHILLIPS SCREW CLOSEST TO THE YOKE AND TIGHTEN IT TO A MINIMUM OF 15 INCH LBS. THEN INSTALL AND TIGHTEN THE SECOND AND LAST SCREW AND TIGHTEN IT TO THE SAME TORQUE. THESE YOKE SCREWS AT JOINT #2 MUST BE TIGHTENED BEFORE TENSIONING THE SPRING STRAP TO PREVENT SCREW HOLES FROM BECOMING MISALIGNED BECAUSE OF SPRING TENSION. DO NOT INSTALL SET SCREW AT THIS TIME.

I 12. INSTALL LOWER ARM / UNIVERSAL JOINT ASSEMBLY.
ATTACH STRAP TO STUD USING TOOL T-12686. INSTALL AND TIGHTEN NUT.

C A U T I O N !!

MAKE SURE YOUR FINGERS ARE AWAY FROM THE HINGE AREA BEFORE PRESSING THE SHORT ARM ALL THE WAY ONTO THE HINGE BRACKET. THERE IS THE RISK OF PINCHING FINGERS IF THE ARM IS PRESSED ON WHILE HOLDING THE MANDREL DOWN. THE MANDREL DOES NOT NEED TO BE HELD DOWN.

SLIDE THE LOWER ARM (SHORT ARM) ONTO THE HINGE BRACKET UNTIL IT IS APPROXIMATELY 1/4" AWAY FROM CONTACTING THE MANDREL. HOLD THE LONG ARM DOWN AND LIFT THE SHORT ARM UP APPROXIMATELY 45 DEGREES. WHILE HOLDING IT IN THAT POSITION, PRESS THE MANDREL DOWN AND RELEASE IT. IT WILL STAY IN POSITION WITHOUT HOLDING IT SO THAT IT CAN FIT INSIDE OF THE SHORT ARM. REMOVE YOUR FINGER FROM THE MANDREL AREA AND SLIDE THE SHORT ARM ON AS FAR AS IT WILL GO. INSTALL AND TIGHTEN TWO SCREWS.

I 13. INSTALL STRAIN RELIEF.
CAREFULLY REMOVE ANY CABLE SLACK THAT MAY BE PRESENT IN THE LONG ARM. GENTLY PULL THE CABLE AT THE STRAIN RELIEF HOLE WHILE HOLDING ON TO THE BLACK AND WHITE WIRES AT THE YOKE. DON'T LET THESE SLIP BACK DOWN INTO THE HOLE IN THE STUD. INSTALL STRAIN RELIEF USING STRAIN RELIEF TOOL.

CAUTION: DISCONNECT LS200 FROM POWER SOURCE BEFORE SERVICING.

I YOKE R & R, CONTINUED.....

I 14. ATTACH LAMP HOUSING ASSEMBLY TO YOKE.

APPLY LUBRICANT DOW CORNING #7 RELEASE COMPOUND (M11175) TO THE CONTACT SURFACES BETWEEN THE YOKE AND LAMP HOUSING. FULLY ENGAGE THE LAMP HOUSING IN THE YOKE. INSERT PIVOT BOLTS THROUGH YOKE WITH FLAT SIDE OF BOLT ALIGNED WITH FLAT OF CENTRAL BRACE. SECURE THE LAMP HOUSING WITH THE FOLLOWING ITEMS ASSEMBLED IN SEQUENCE AS LISTED (FOR EACH PIVOT BOLT):

1ST....INSTALL ONE (1) SPACER (GRAY WASHER),
2ND... INSTALL ONE (1) WAVE WASHER,
3RD... APPLY LOCTITE 242, WA M#30338 TO ONE HALF OF 5 15/16" NUT THREADS,
4TH... ONE 15/16 " NUT. TIGHTEN NUTS EQUALLY, UNTIL ONE THREAD IS VISIBLE ON THE BOLT. ROTATE THE LAMP HOUSING ASSEMBLY BY PULLING WITH A FORCE GAUGE AT THE TOP OF THE CENTER BOLT. ADJUST NUT TIGHTNESS UNTIL A READING OF BETWEEN 1.0 TO 3.0 LBS IS OBTAINED.

I 15. INSTALL THE LAMP HOLDERS AND RESTORE CONNECTIONS.

FASTEN LAMP HOLDERS TO LAMP HOUSING USING THREE #6 PHILLIPS HEAD SCREWS. FEED WIRES THROUGH THE YOKE CHANNEL, PIVOT BOLTS, AND UNDER THE CENTRAL BRACE. GENTLY PULL ON THE BLACK AND WHITE CABLE WIRES AS THEY ENTER LAMP HOUSING TO REMOVE ANY SLACK THAT MIGHT BE PRESENT WHERE THEY PASS THROUGH THE HOLLOW CRESCENT OF THE YOKE. WHEN SLACK IS REMOVED, PRESS WIRES INTO NOTCHES IN THE CRESCENT OR THE FOAM INSERT WILL NOT FIT PROPERLY. INSTALL FOAM IN YOKE. ATTACH WELCH ALLYN LOGOS IN RECESSES OVER PIVOT BOLTS AND ALIGNED WITH PARTING LINE IN YOKE.

I 16. INSTALL BEZEL.

CRIMP TWO FEMALE QUICK CONNECTS PN 106130-8 ONTO THE BLACK AND WHITE POWER WIRES. ATTACH WIRES TO SWITCH AND INSTALL WIRE TIES PER DWG#441013. INSTALL LAMPS AND BEZEL (SEE B-3 THROUGH B-4).

I 17. INSTALL SET SCREW AND ADJUST JOINT #2 SET SCREW.

PLACE ONE DROP OF LOCTITE 222 M#30375 TO SET SCREW AND THREAD INTO HOLE. PLACE UNIT IN UPRIGHT POSITION AND ROTATE JOINT #2 TO THE ‘STOP’. VERY SLOWLY, LOOSEN SET SCREW UNTIL THE LIGHT HOUSING ROTATES DOWNWARD. STOP AND TURN THE SCREW CLOCKWISE 1/4 TURN. ROTATE THE LIGHT HOUSING TO THE ‘STOP’ AND RELEASE. IF THE SET SCREW IS ADJUSTED PROPERLY, THE LIGHT HOUSING WILL STAY IN POSITION WHEN RELEASED.

CAUTION: DISCONNECT LS200 FROM POWER SOURCE BEFORE SERVICING.

I YOKE R & R, CONTINUED.....

I 18. TEST JOINTS.

WITH THE LS200 IN AN UPRIGHT POSITION, CYCLE THE ARM UP AND DOWN THREE TO FIVE TIMES. CHECK FORT AN;Y BINDING OF THE JOINT. WITH THE ARM AT 45 DEGREES, CHECK FOR DROOP. WITH THE ARM ALL THE WAY DOWN AT THE 90 DEGREE POSITION, CHECK FOR SPRINGBACK. TEST TO VERIFY SAFE OPERATION. CONNECT TO A.C. POWER SOURCE AND VERIFY THAT ALL THREE LAMPS ILLUMINATE.

T E C H N I C I A N N O T E S :

CAUTION: DISCONNECT LS200 FROM POWER SOURCE BEFORE SERVICING.

J JOINT #3 R & R.

J 1. REMOVE LOWER ARM.
REMOVE TWO FLAT HEAD PHILLIPS SCREWS NEAREST JOINT #3 (ADJUSTABLE JOINT), AND SLIDE LOWER ARM OFF OF HINGE BRACKET.

J 2. REMOVE STRAP FROM HINGE BRACKET.
UNSCREW NUT FROM STUD. USE SLIP JOINT PLIERS TO PULL AND LIFT STRAP FROM STUD.

J 3. UNSCREW HINGE FROM UPPER ARM.
UNSCREW TWO FLAT HEAD PHILLIPS SCREWS IN UPPER ARM NEAREST HINGE. REMOVE HINGE JOINT FROM UPPER ARM BEING CAREFUL NOT TO CATCH THE END OF THE STRAP ON PARTS OF THE HINGE JOINT.

J 4. DISASSEMBLE HINGE IF NECESSARY.
REMOVE JOINT KNOB AND BOLT. REMOVE THE NON TWIST BRACE (NTB) AND NYLON WASHERS. REMOVE ALL HINGE PARTS.

J 5. INSTALL NEW HINGE SEGMENTS.
PLACE LOCTITE PRIMER #770 (M30391) ONTO JOINT BEARINGS PRIOR TO ASSEMBLY AND ALLOW TO DRY UNTIL A DULL FINISH RETURNS TO PART. APPLY TWO DROPS OF LOCTITE #403 (M30372) TO HINGE BRACKETS ON SURFACE WHERE BEARINGS MATE. ADHERE THE BEARINGS TO THE HINGE BRACKETS. POSITION THE PARTS ON THE BENCH WITH THE OPEN SIDE OF THE HINGE BRACKETS FACING YOU, AND THE HINGE BRACKET WITH THE STUD ON YOUR LEFT HAND SIDE.

J 6. INSERT PIVOT BOLT.
SCREW THE GOAL POST ONTO THE MANDREL. PLACE THE MANDREL, WITH FRICTION WASHER ON BOTTOM, INTO THE CENTER OF THE ASSEMBLY. PLACE THE NON-TWIST-BRACE (NTB) SQUARE CUT-OUT ON TOP, AND ONE NYLON WASHER (ON THE BOTTOM SIDE), OVER THE ENTIRE JOINT ASSEMBLY. THE TAB ON THE NTB SHOULD ENGAGE WITH THE HINGE BRACKET. INSERT A SCREWDRIVER THROUGH ASSEMBLY AND ALIGN PARTS. REMOVE SCREWDRIVER AND INSERT PIVOT BOLT THROUGH ASSEMBLY. ENSURE THAT THE SQUARE ON THE PIVOT BOLT COMPLETELY ENGAGES WITH THE SQUARE OF THE NTB. TIGHTEN KNOB ONTO BOLT.

J 7. INSTALL JOINT ASSEMBLY.
SLIDE JOINT ASSEMBLY INTO THE UPPER ARM WHILE ROUTING STRAP UNDER THE MANDREL. ATTACH THE JOINT TO THE UPPER ARM WITH TWO PHILLIPS SCREWS.

CAUTION: DISCONNECT LS200 FROM POWER SOURCE BEFORE SERVICING.

J JOINT #3 R & R CONTINUED.....

J 8. INSTALL LOWER ARM / UNIVERSAL JOINT ASSEMBLY.
ATTACH STRAP TO STUD USING TOOL T-12686. INSTALL AND TIGHTEN NUT.

C A U T I O N !!
MAKE SURE YOUR FINGERS ARE AWAY FROM THE HINGE AREA BEFORE PRESSING THE SHORT ARM ALL THE WAY ONTO THE HINGE BRACKET. THERE IS THE RISK OF PINCHING FINGERS IF THE ARM IS PRESSED ON WHILE HOLDING THE MANDREL DOWN. THE MANDREL DOES NOT NEED TO BE HELD DOWN.

SLIDE THE LOWER ARM (SHORT ARM) ONTO THE HINGE BRACKET UNTIL IT IS APPROXIMATELY 1/4" AWAY FROM CONTACTING THE MANDREL. HOLD THE LONG ARM DOWN AND LIFT THE SHORT ARM UP APPROXIMATELY 45 DEGREES. WHILE HOLDING IT IN THAT POSITION, PRESS THE MANDREL DOWN AND RELEASE IT. IT WILL STAY IN POSITION WITHOUT HOLDING IT SO THAT IT CAN FIT INSIDE OF THE SHORT ARM. REMOVE YOUR FINGER FROM THE MANDREL AREA AND SLIDE THE SHORT ARM ON AS FAR AS IT WILL GO. INSTALL AND TIGHTEN TWO SCREWS.

J 9. TEST TO VERIFY SAFE AND PROPER OPERATION.
WITH THE LS200 IN AN UPRIGHT POSITION, CYCLE THE ARM UP AND DOWN THREE TO FIVE TIMES. CHECK FOR ANY BINDING OF THE JOINT. WITH THE ARM AT 45 DEGREES, CHECK FOR DROOP. WITH THE ARM ALL THE WAY DOWN AT THE 90 DEGREE POSITION, CHECK FOR SPRINGBACK. CONNECT TO A.C. POWER SOURCE AND VERIFY ALL THREE LAMPS ILLUMINATE.

T E C H N I C I A N N O T E S :

_____

_____

_____

_____

_____

CAUTION: DISCONNECT LS200 FROM POWER SOURCE BEFORE SERVICING.

K CABLE R & R.

K 1. REMOVE JOINT # 3 (MAIN HINGE WITH KNOB).
FOLLOW INSTRUCTIONS IN SECTION J-1 THROUGH J-4 ON PG.25.

K 2. REMOVE BEZEL.
FOLLOW INSTRUCTIONS IN SECTION A-1 AND A-2 ON PG.13.

K 3. DISCONNECT CABLE FROM POWER SOURCE.
REMOVE FOUR SCREWS TO OPEN TRANSFORMER HOUSING. DISCONNECT CABLE FROM TRANSFORMER.

K 4. DISCONNECT CABLE FROM LONG ARM.
REMOVE STRAIN RELIEF WITH HEYCO TOOL #29. CUT CONNECTORS FROM BOTH ENDS OF THE CABLE. PULL FOAM OUT OF YOKE AND PULL WIRES OUT OF YOKE. REFER TO SECTION I-5 AND I-6 TO REMOVE YOKE FROM ARM AND TO OBTAIN ACCESS TO THE CABLE. REMOVE CABLE FROM THE ASSEMBLY BY PULLING FROM THE STRAIN RELIEF HOLE.

K 5. INSTALL NEW CABLE IN LONG ARM.
PLACE THE CABLE (END WITH LONGER LEADS) IN THROUGH THE STRAIN RELIEF HOLE OF THE LONG ARM AND OUT THROUGH THE OTHER END OF THE ARM TUBE. PLACE CORD TUBE OVER THE CABLE AND INTO THE ARM. SEPARATE THE LONG LEADS. PLACE THE ELECTRICAL CABLE THROUGH THE CONNECTOR BLOCK/YOKE ASSEMBLY. PULL THE WIRE UP THROUGH THE YOKE UNTIL THE INSULATION CAN BE SEEN IN THE YOKE. THE INSULATED PORTION WILL END AT THE EXIT POINT OF THE WIRES.

IMPORTANT:CHECK THE POSITION OF THE CABLE IN THE ARM. CABLE SHOULD RUN UNDER THE SPRING/STRAP ASSEMBLY. CORD TUBE SHOULD COVER THE CABLE ALL THE WAY DOWN TO THE STRAIN RELIEF. PULL CABLE TO REMOVE SLACK AND SECURE WITH STRAIN RELIEF.

K 6. ATTACH YOKE TO ARM.
REFER TO SECTIONS I-8 THROUGH I-11.

K 7. RESTORE CONNECTIONS AND ATTACH BEZEL.
REFER TO SECTIONS H-9 AND H-10. FOLLOW INSTRUCTIONS IN SECTION A-3, PAGE 13 TO REPLACE BEZEL.

K 8. INSTALL HINGE ASSEMBLY AND SHORT ARM ASSEMBLY.
REFER TO SECTION J-7 AND J-8 ON PAGES 26-27, TO ATTACH THE HINGE JOINT#3 TO LS200. REFER TO SECTION J-8, PG. 27 TO ATTACH THE SHORT ARM ASSEMBLY TO LS200.

K 9. RESTORE WIRING CONNECTIONS IN TRANSFORMER HOUSING.
CRIMP CONNECTORS PN 106134-2 ONTO TRANSFORMER END OF CABLE. RECONNECT TO SECONDARY CONNECTORS ON TRANSFORMER. FOLLOW STEP F-5 TO CLOSE HOUSING.

CAUTION: DISCONNECT LS200 FROM POWER SOURCE BEFORE SERVICING.

K CABLE R & R.

K 10. INSTALL SET SCREW AND ADJUST.

PLACE ONE DROP OF LOCTITE 222 M#30375 TO SET SCREW AND THREAD INTO HOLE. PLACE UNIT IN UPRIGHT POSITION AND ROTATE JOINT #2 TO THE 'STOP'. VERY SLOWLY, LOOSEN SET SCREW UNTIL THE LIGHT HOUSING ROTATES DOWNWARD. STOP AND TURN THE SCREW CLOCKWISE 1/4 TURN. ROTATE THE LIGHT HOUSING TO THE 'STOP' AND RELEASE. IF THE SET SCREW IS ADJUSTED PROPERLY, THE LIGHT HOUSING WILL STAY IN POSITION WHEN RELEASED.

K 11. TEST TO VERIFY SAFE AND PROPER OPERATION.

PERFORM STEP J-9. PERFORM HY-POT TEST PER A-02861.

END CABLE R & R

---

L JOINT #4 / UNIVERSAL CONNECTOR R & R.

L 1. REMOVE CONNECTOR BLOCK.

REFER TO DRAWING #441009 FOR ASSEMBLY. REMOVE SET SCREW AND TWO PHILLIPS HEAD SCREWS FROM LOWER END OF SHORT ARM. REMOVE THE END CAP, CONNECTOR PLATE, UNIVERSAL CONNECTOR, BRAKE, ONE FLAT SPRING AND CONNECTOR BLOCK AND TWO NYLINERS.

L 2. REASSEMBLE CONNECTOR BLOCK/UNIVERSAL CONNECTOR ASSEMBLY.

PLACE NYLINERS AT EACH END OF THE CONNECTOR BLOCK BORE. PLACE ONE END CAP ONTO THE UNIVERSAL CONNECTOR. PLACE THE UNIVERSAL CONNECTOR INTO THE CONNECTOR BLOCK BORE. PLACE THE BRAKE MATERIAL AND ONE FLAT SPRING (CURVED SIDE UP) OVER OPENING IN THE CONNECTOR BLOCK.

L 3. SECURE CONNECTOR BLOCK TO SHORT ARM TUBE WITH TWO SCREWS.

FIRST INSTALL THE PHILLIPS SCREW CLOSEST TO THE END OF THE ARM AND TIGHTEN IT TO A MINIMUM OF 15 INCH LBS. THEN INSTALL AND TIGHTEN THE SECOND AND LAST SCREW AND TIGHTEN IT TO THE SAME TORQUE.

L 4.INSTALL SET SCREW AND ADJUST JOINT #4 SET SCREW.

INSTALL SET SCREW WITHOUT LOCTITE. THREAD INTO HOLE. PLACE THE COMPLETED UNIT ON A TWO DEGREE FROM VERTICAL MOUNTING. ADJUST THE LONG ARM TO A HORIZONTAL POSITION. ROTATE LS200 TO THE HIGHER OF THE TWO STOPS. VERY SLOWLY, LOOSEN SET SCREW UNTIL THE LS200 STARTS TO MOVE TOWARDS THE LOWER STOP. STOP AND TURN THE SCREW CLOCKWISE 1/4 TURN. ROTATE THE LS200 TO THE 'STOP' AND RELEASE. IF THE SET SCREW IS ADJUSTED PROPERLY, THE LIGHT HOUSING WILL STAY IN POSITION WHEN RELEASED.

CAUTION: DISCONNECT LS200 FROM POWER SOURCE BEFORE SERVICING.

M MOBILE STAND DISASSEMBLY / ASSEMBLY.

M 1. CASTERS
PRY THE CASTERS OUT USING TOOL DESIGNED FOR 486 MOBILE STAND.

M 2. POLE REMOVAL.
UNSCREW THE HEX-HEAD SCREW UNDER THE BASE.

M 3. BASE LEGS.
UNSCREW TWO CAP SCREWS AT EACH END OF THE BASE.

****

N WALL MOUNT DISASSEMBLY. (REFER TO DRAWING #441007)

N 1. REMOVE MOUNT BRACKET FROM WALL PLATE.
REMOVE FOUR SCREWS AND REMOVE BRACKET FROM PLATE.

N 2. REMOVE CLAMP BUSHING BOTTOM OF MOUNT BRACKET.
REMOVE SET SCREW FROM ASSEMBLY. THIS SCREW WAS INSTALLED WITH LOCTITE. REMOVE THREE HEX HEAD CAP SCREWS FROM CLAMP BUSHING AND REMOVE.

N 3. REMOVE PIN AND WASHERS.
TAP OUT PIN. SPRING WASHERS, BUSHINGS WILL COME OUT.

REASSEMBLE WALL MOUNT. (SEE DRAWING #441014)

N. 4. INSTALL WASHERS AND NYLINER.
PLACE NYLINERS INTO THE MOUNT BRACKET. PLACE A NYLON WASHER OVER THE NYLINER, THEN TWO SPRING WASHERS, CONVEX SIDES TOGETHER, AND ANOTHER NYLON WASHER.

N 5. INSTALL PIN.
SLIDE THE MOUNT ARM INTO THE ASSEMBLY AND INSERT A NYLON WASHER BETWEEN THE ARM AND BRACKET. PLACE THE CLAMP BUSHING AND ANOTHER NYLINER INTO THE MOUNT BRACKET ASSEMBLY AND LINE UP HOLES. DROP A PIN INTO THE ASSEMBLY WITH THE MOUNT ARM PERPENDICULAR TO THE MOUNT BRACKET.

N 6. SECURE ARM WITH SET SCREW.
SECURE WITH THREE SCREWS TIGHTENED TO 18 IN-LBS. MINIMUM. LINE UP THE BOSS ON THE PIN WITH THE LENGTHWISE AXIS OF THE ARM. PLACE LOCTITE ONTO THE THREADS OF THE SET SCREW AND INSERT IT INTO THE THREADED HOLE ON THE END OF THE ARM. TIGHTEN THE SET SCREW TO 18 IN-LBS. MINIMUM.

N WALL MOUNT BRACKET ASSEMBLY CONTINUED.....

N 7. ATTACH THE ARM TO WALL PLATE.
INSERT FOUR SCREWS INTO BRACKET THROUGH REAR OF WALL PLATE AND TIGHTEN TO 25 IN-LBS. MINIMUM.

T E C H N I C I A N  N O T E S :

# APPENDIX AA

## EXPLODED VIEW OF LS200 WITH PARTS LEGEND

# Nos. 44200, 44202, 44204, 44206
# LS 200™ Procedure Light

Introduced September, 1994

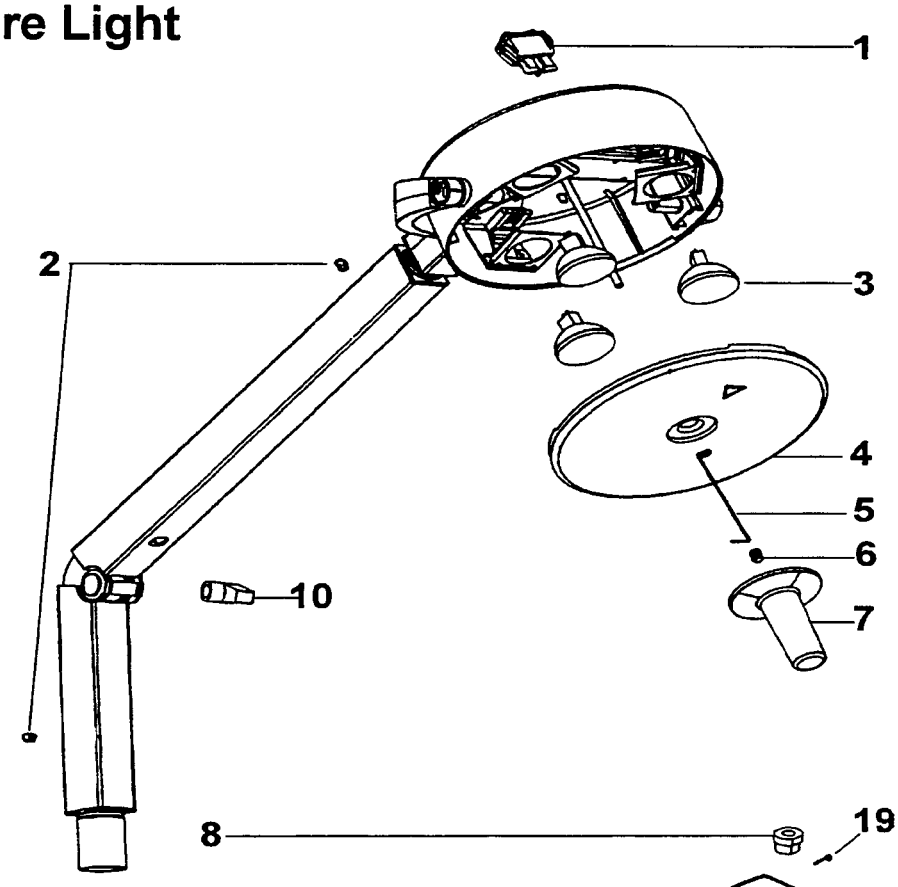


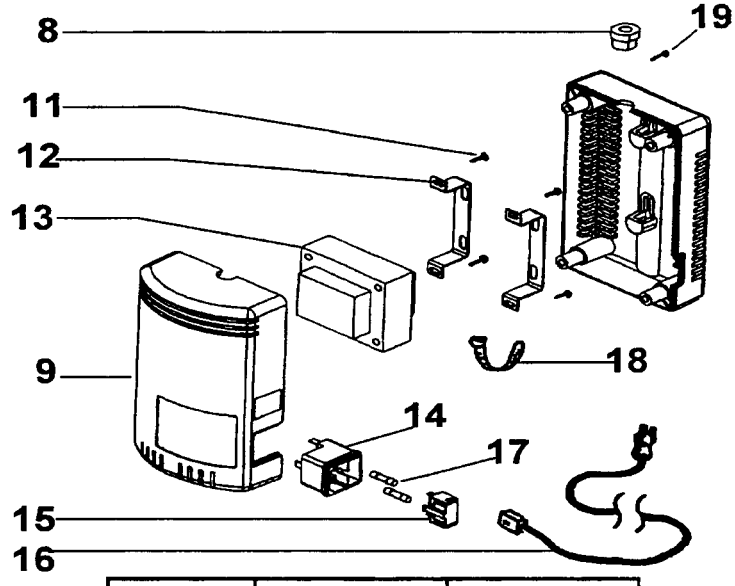


| Ref. | Part No. | Description |
|---|---|---|
| 1 | 236730 | Power Switch |
| 2 | 106113-11 | 10-32 Set Screw |
| 3 | 06400 | Lamp |
| 4 | 441145-501 | Bezel Assembly |
| 5 | 441117 | Tether Wire |
| 6 | 106116-3 | Insert |
| 7 | 441074 | Handle |
| 8 | 745150 | Strain Relief |
| 10 | 441045-1 | Arm Knob |
| 11 | 711420-1 | 1/2" Self Tapping Screw |
| 12 | 441107 | Transformer Strap |
| 13 | 441089 Domestic | Transformer (Model 44200) |
| 13 | 441088 Int'l | Transformer (Model 44206) |
| 14 | 236732 | IEC Connector |
| 15 | 236733 | Fuse Drawer |
| 17 | 236706-3907&3114 | Fuse |
| 18 | 761077-1 | Tie Wrap |
| 19 | 106124-18 | #8 x .125" Self Tapping Screw |

| Model Number | #9 Transformer Housing with Label Assy | #16 Detachable Power Cord |
|---|---|---|
| 44200 | 441015-501 | 761076-0 |
| 44202 | 441015-512 | 761076-2 |
| 44204 | 441015-514 | 761076-4 |
| 44206 | 441015-506 | 761076-6 |

Reference Figure 441144, Repair BOM 44200 REPAIR or appropriate Repair BOM

# LS200™ Mobile Stand, No. 44250
# LS200™ Wall Mount, No. 44210

Introduced September, 1994

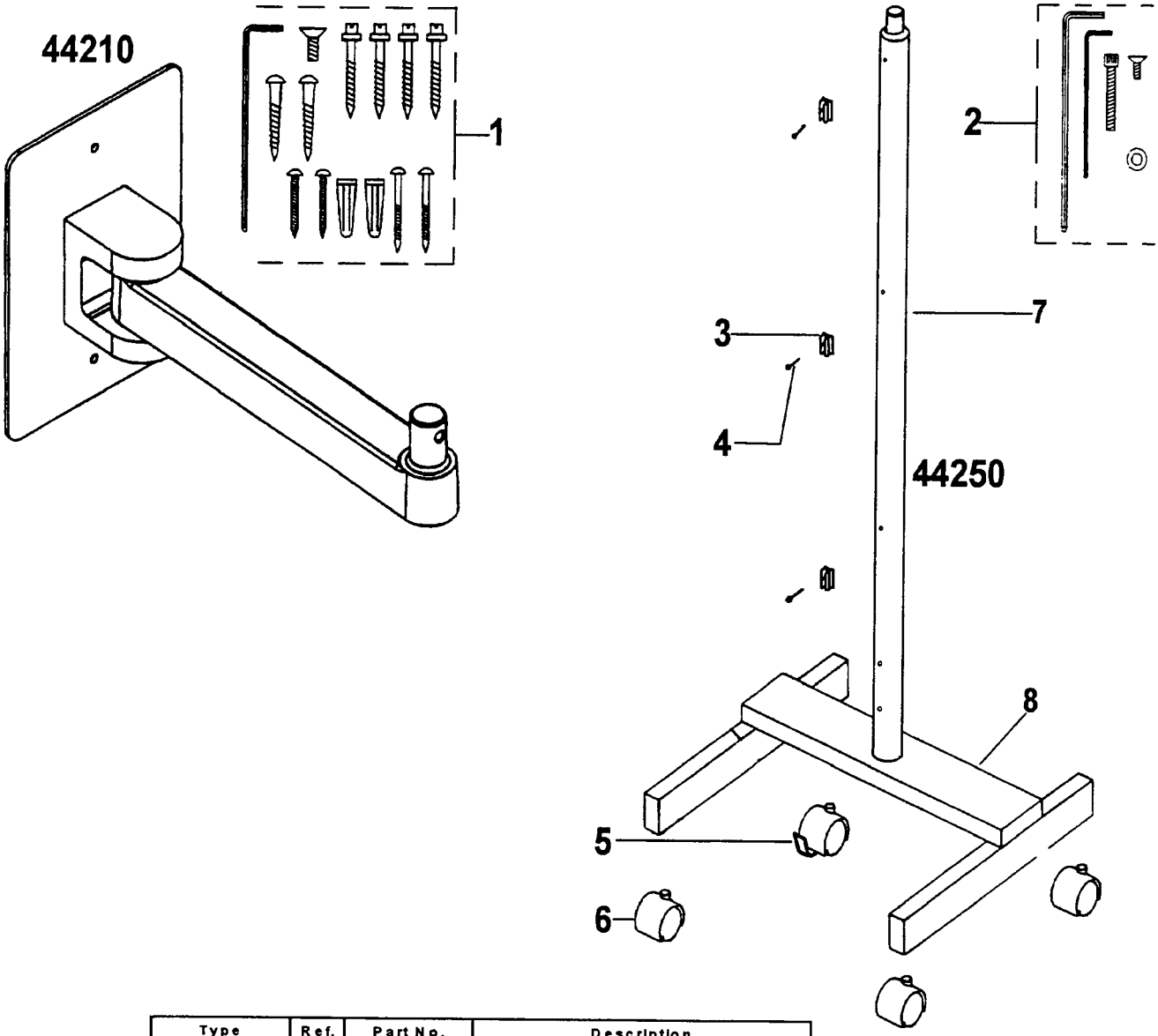


| Type | Ref. | Part No. | Description |
|---|---|---|---|
| Wall Mount | 1 | 441112-502 | Wall Mount Hardware Kit |
| Mobile Stand | 2 | 441112-501 | Mobile Stand Hardware Kit |
| Mobile Stand | 3 | 441106 | Wire Clip |
| Mobile Stand | 4 | 106100-13 | 6-32 Screw |
| Mobile Stand | 5 | 485642 | Caster with Brake |
| Mobile Stand | 6 | 485642-1 | Caster without Brake |
| Mobile Stand | 7 | 441004-501 | Mobile Stand Pole |
| Mobile Stand | 8 | 441001-501 | Mobile Stand Base |
| Mobile Stand | 9* | 106119-9 | Screw SHCS 2.5" (Not Shown) |
| Mobile Stand | 10* | 106105-2 | Lockwasher, Hel 1/4 x 20 (Not Shown) |

*Used to Secure Item #8

Reference Figure 441146, Repair BOM 44210 REPAIR or 44250 REPAIR

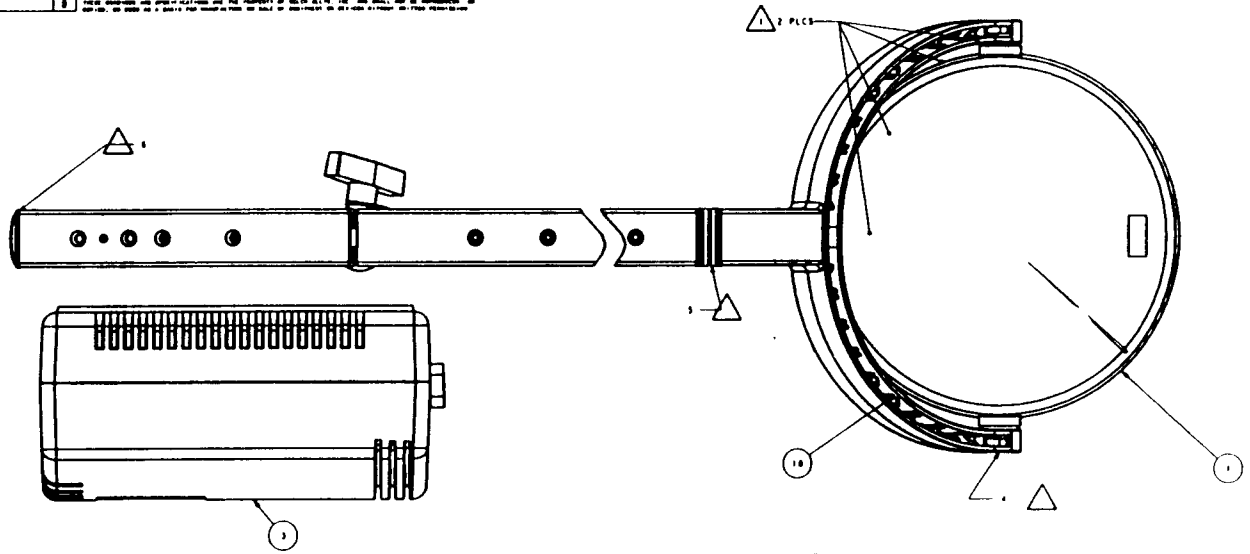


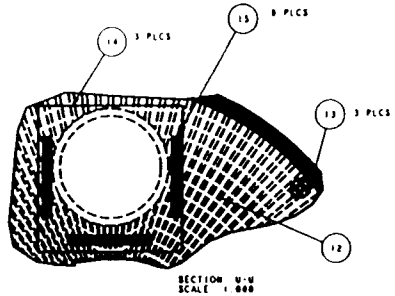


SECTION U-U
SCALE 1.000

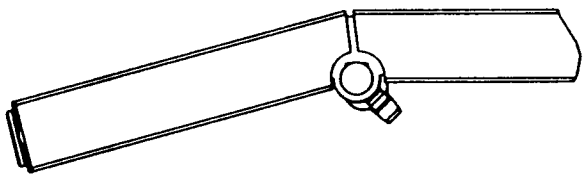

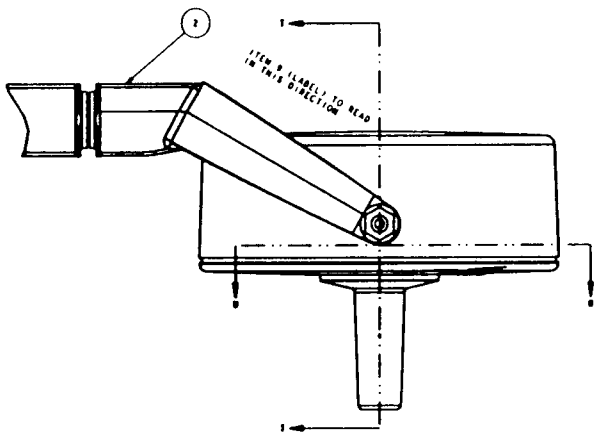


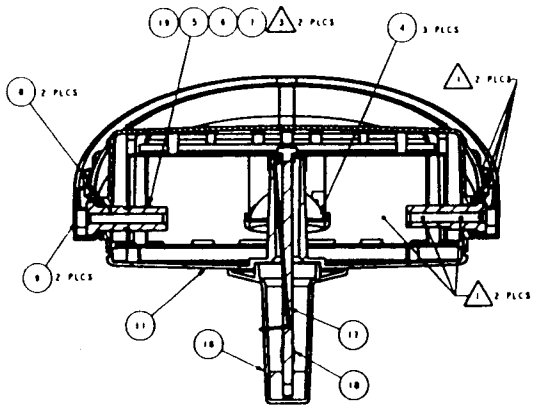


SECTION T-T

NOTES:

1. WIRES TO BE ROUTED THRU ASSEMBLY AS INDICATED BY NODES.
2. ALL HARDWARE FOR THIS ASSEMBLY DRAWING HAS BEEN OMITTED. ITEM NUMBERS AND LOCATION HAVE BEEN NOTED.
3. NUTS (ITEM 7) TO BE TORQUED 4.5± .5 IN-LBS
4. FORCE TO ROTATE TO BE 0.7LBS - 2.7LBS. FORCE TO BE MEASURED FROM 80° TO 10°
5. TORQUE TO ROTATE TO BE 22.50 - 28.75 IN-LBS. CW TORQUE TO BE MEASURED FROM 0° TO THE STOP
6. TORQUE TO ROTATE TO BE 17.6 - 28.3 IN-LBS. CCW TORQUE TO BE MEASURED FROM 0° TO THE STOP

| REV | DESCRIPTION | ECN | INIT | DATE | APPD |
|---|---|---|---|---|---|
| A | RELEASE TO PROD EMS | S-20546 | BMF | 9.26.96 | RLM |
| B | ADDED NOTES 4,5,6 UPDATED VIEWS | S-21096 | BMF | 1.28.98 | RLM |

| | |
|---|---|
| THIS DWG 5068 | LS200 ASSEMBLY AUSTRALIA |
| THIS DWG 5048 | LS200 ASSEMBLY-UK |
| THIS DWG 502N | LS200 ASSEMBLY-EUROPE |
| THIS DWG 501N | LS200 ASSEMBLY DOMESTIC |
| PART NO | DESCRIPTION |

| | |
|---|---|
| PART NO | 441000 ASB |
| MATERIAL | N/A |
| FINISH | N/A |
| DESCRIPTION | |
| DRAWN | BMF/RDB |
| DATE | 2-10-98 |
| DESIGNED | |
| CHECKED | |
| APPROVED | |
| RELEASED TO PROD | |
| Welch Allyn | |
| TITLE | ASSEMBLY, LS200 FINAL |
| CODE IDENT 06470 | D |
| DRAWING NO | 441000 |
| REV | B |
| SCALE | 0.660 |
| DO NOT SCALE | |
| SHEET | 1 OF 1 |

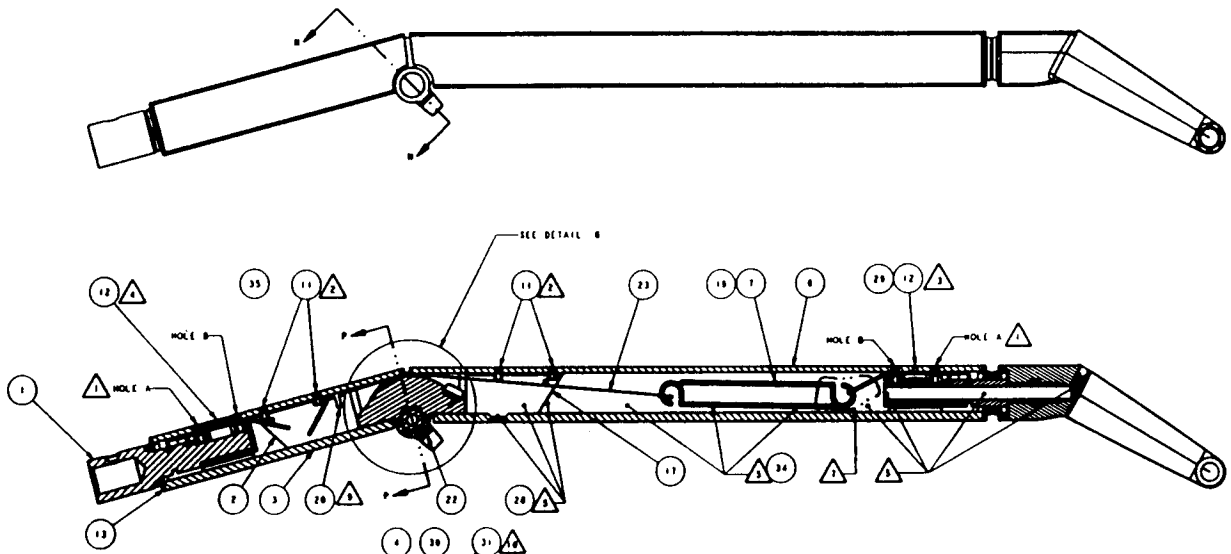


SECTION Y-Y

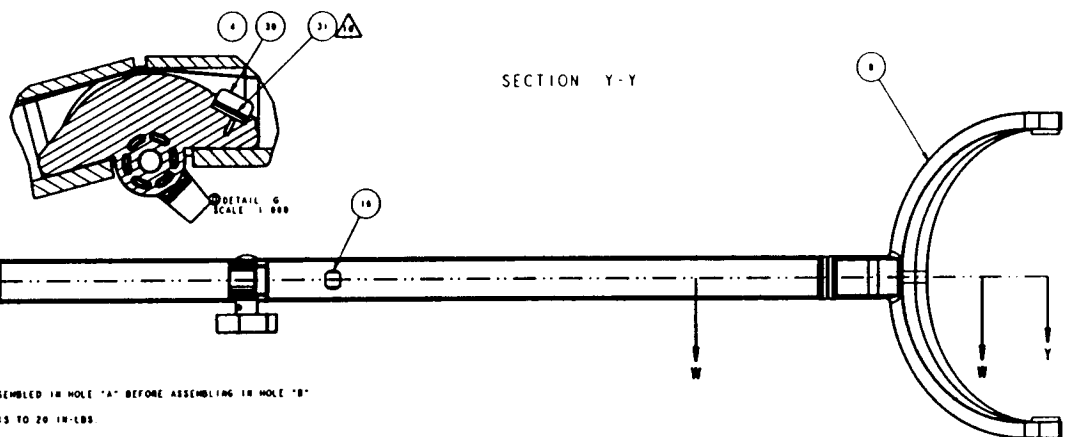


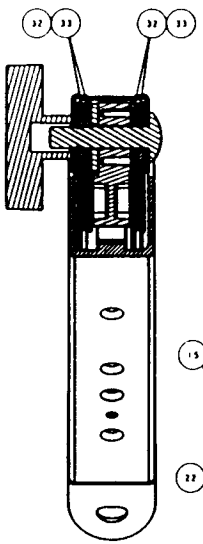

SECTION H-H
SCALE 1.000

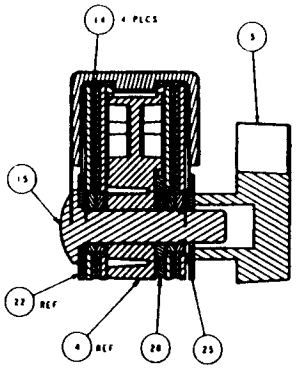


SECTION P-P
SCALE 1.500

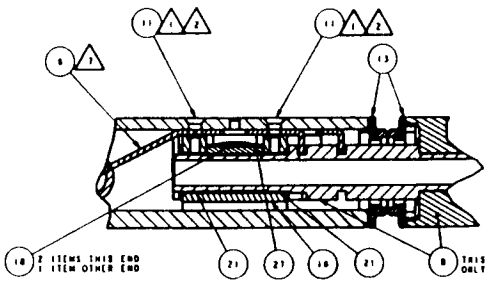


SECTION W-W
BOTH ENDS UNLESS NOTED
SCALE 1.000

| REV | DESCRIPTION | ECO | INIT | DATE | APPD |
|---|---|---|---|---|---|
| A | RELEASE TO PROD CMS | 5 3046 | RBB | 3-21-94 | RJH |
| B | DELETED ITEMS 20,24, NOTE 8 | 5 3049 | RBB | 7-20-94 | RJH |
| C | ADDED ITEM 29 | 5 3086 | RBB | 8-4-94 | RJH |
| D | CHANGED 4.75 TO 5.5<br>ADDED ITEMS 30,31,32,33,34,35.<br>DETAIL G, NOTE 10<br>UPDATED ALL ITEM NO CURRENT REV | 5 3088 | RBB | 9-13-94 | RL |
| E | CHANGED 5.5 TO 3.75 | 5 3147 | RBB | 10-4-94 | RJH |

NOTES:

1. SCREW, ITEM 11, TO BE ASSEMBLED IN HOLE "A" BEFORE ASSEMBLING IN HOLE "B"
2. SCREWS TO BE TORQUED TO 15 TO 20 IN-LBS.
3. SCREW TO BE TORQUED TO 3.75±.5 IN-LBS.
4. SCREW TO BE TORQUED TO 3±.5 IN-LBS
5. CORD TO BE ROUTED THRU ARM AS INDICATED BY NODES FOR THIS NOTE.
6. ALL HARDWARE FOR THIS ASSEMBLY DRAWING HAS BEEN OMITTED. LOCATIONS AND ITEM NUMBERS HAVE BEEN NOTED.
7. ITEM 18 TO BE SHRUNK OVER ITEM 7 AND THE END OF ITEM 9 AS SHOWN.
8. NUT TO BE TORQUED TO 15-20 IN-LBS.
10. SCREW TO BE TORQUED TO 2 TO 4 IN-LBS

| | | | |
|---|---|---|---|
| THIS DWG-SUB | | ARM ASSEMBLY | |
| PART NO HE178 | | DESCRIPTION | |
| MATERIAL: 6/A | | DRAWN RBB 12-8-93 | Weicl. Alps. |
| FINISH SEE NOTES | | DESIGNED | TITLE: ARM ASSEMBLY |
| | | CHECKED DGT 8-29-94 | |
| UNLESS OTHERWISE SPECIFIED DIMENSIONS ARE IN INCHES AND INCLUDE PLATING TOLERANCES: XX ± .03 ANGLES ±1/2° .XXX ± .005 TOLERANCES PER ASME Y14.5 REMOVE BURRS & BREAK EDGES EXTERNAL THDS = CLASS 2A INTERNAL THDS = CLASS 2B | | APPROVED RJH 8-29-94 | CODE IDENT NO 06666 D DRAWING NO 441089 REV E |
| | | REL TO PROD RBB 9-30-94 | SCALE 0.500 DO NOT SCALE SHEET 1 |

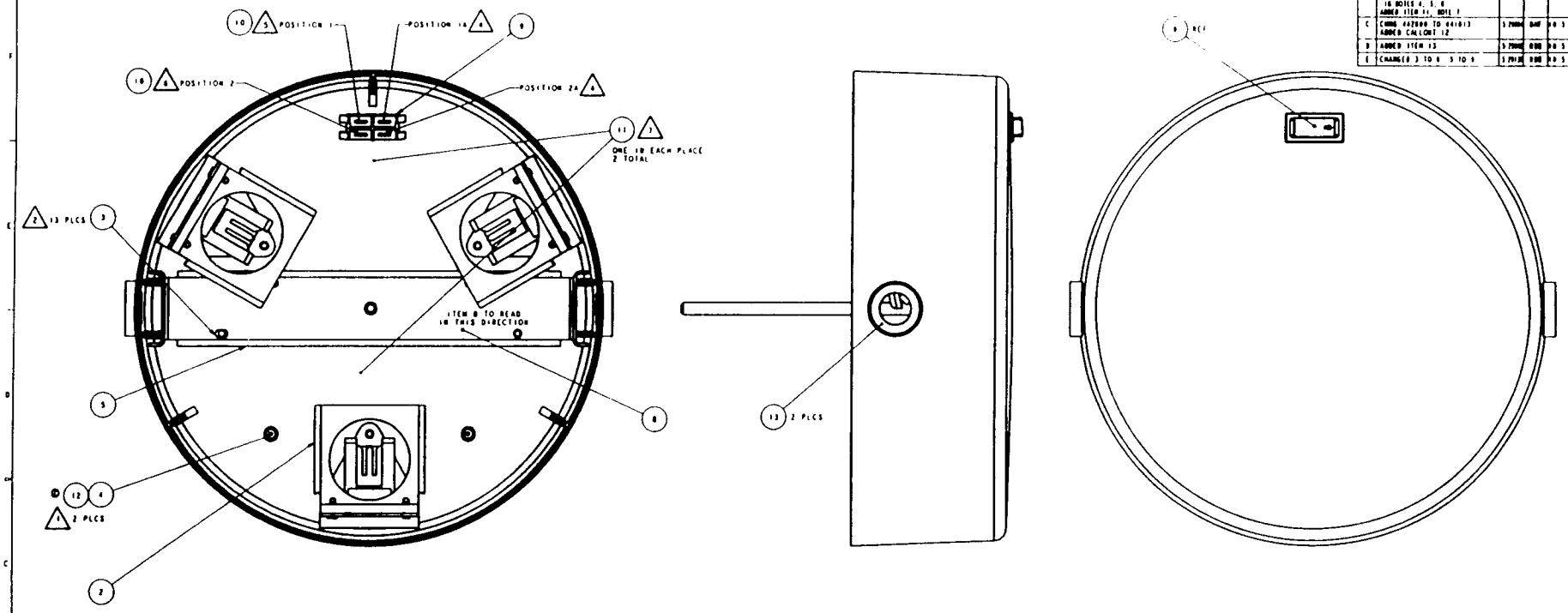


| REV | DESCRIPTION | ECO | UNIT | DATE | APPD |
|---|---|---|---|---|---|
| B | CHANGED "POSITION" TO "POSITION" IN NOTES 4, 5, 6 ADDED ITEM 11, NOTE 7 | 1 7678 | BBB | 7 25 94 | RJB |
| C | CHNG 442888 TO 441813 ADDED CALLOUT 12 | 1 7888 | BMF | 8 5 94 | RJB |
| D | ADDED ITEM 13 | 1 7888 | BBB | 8 5 94 | RJB |
| E | CHANGED 3 TO 8 5 TO 9 | 1 7913 | BBB | 8 5 94 | RJB |

NOTES

(11) 1 SCREWS TO BE TORQUED TO 6±1 IN/LBS

(12) 2 SCREWS TO BE TORQUED TO 9±1 IN/LBS

3 - ALL HARDWARE AND ELECTRICAL WIRING FOR THIS ASSEMBLY DRAWING HAS BEEN OMITTED LOCATION AND ITEM NUMBERS HAVE BEEN NOTED.

(13) 4 CONNECT ONE RED WIRE FROM THE ELECTRICAL ASSEMBLY (ITEM 2) TO POSITION 1A ON THE ON/OFF SWITCH (ITEM 9) THE OTHER RED WIRE TO BE CONNECTED TO POSITION 2A

(14) 5 CONNECT ONE WHITE WIRE OF THE OUTPUT CABLE FROM THE ARM ASSEMBLY TO POSITION 1 ON THE ON/OFF SWITCH (ITEM 9)

(15) 6 CONNECT ONE BLACK WIRE OF THE OUTPUT CABLE FROM THE ARM ASSEMBLY TO POSITION 2 ON THE ON/OFF SWITCH (ITEM 9)

(16) 7 ITEM 11 (TIE WRAP) TO BE LOCATED IN THESE AREAS

| | | | |
|---|---|---|---|
| 441813 SUB | LUMINAIRE ASSEMBLY | | |
| PART NO 441813 ASM | DESCRIPTION | | |
| MATERIAL N/A | DRAWN BMF | DATE 7 18 94 | Welch Allyn |
| FINISH N/A | DESIGNED | | TITLE ASS'Y, LUMINAIRE |
| | CHECKED DGT | 6 29 94 | |
| UNLESS OTHERWISE SPECIFIED DIMENSIONS ARE IN INCHES AND INCLUDE PLATING TOLERANCES: XX ± .03 XXX ± .005 ANGLES ± 1° FRACTIONS ± 1/64 MACHINED SURFACES 63 MICRO INCH OTHER SURFACES 125 MICRO INCH | APPROVED RJB | 6 29 94 | CODE IDENT NO 04406 D DRAWING NO 441813 REV E |
| | REL TO PROD BBB | 6 30 94 | SCALE 1.000 WT UNIT SCALE SHEET 1 OF 1 |

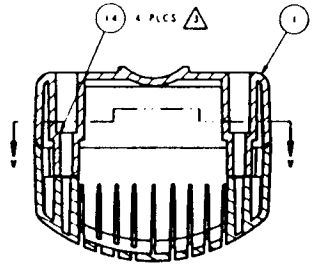


SECTION X-X

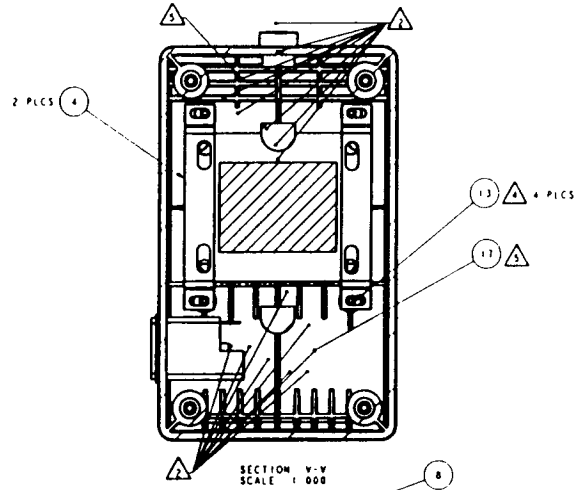


SECTION V-V
SCALE 1 000

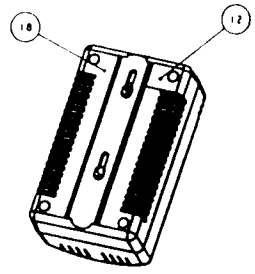


SCALE 0 500

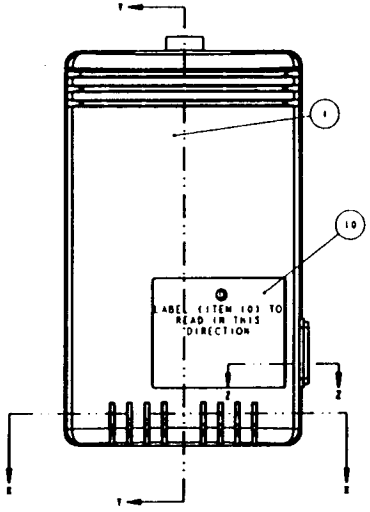


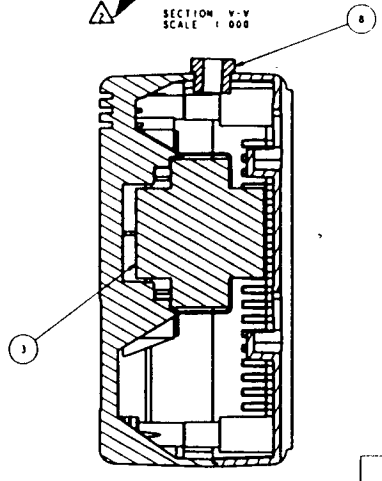


SECTION Y-Y

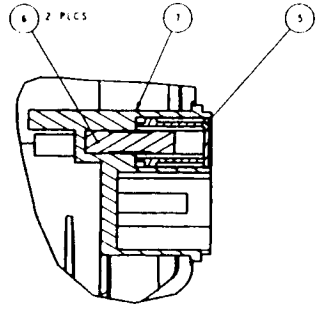


SECTION Z-Z
SCALE 2 000

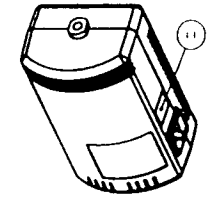


SCALE 0 500

NOTES

1. ALL HARDWARE FOR THIS ASSEMBLY HAS BEEN OMITTED. ITEM NUMBERS & LOCATION HAVE BEEN NOTED.
2. WIRES TO BE LOCATED IN THIS AREA. SEE TABLE 1 FOR CONNECTION DETAILS
3. SCREWS TO BE TORQUED TO 20±2 IN-LBS
4. SCREWS TO BE TORQUED TO 20±2 IN-LBS
5. ITEM 12 (TIE WRAP) TO BE LOCATED IN THIS AREA
6. OUTPUT CABLE FROM ARM ASSEMBLY TO BE ROUTED THROUGH ITEM 8 (STRAIN RELIEF) AND CONNECTED AS INDICATED

TABLE 1
WIRES FROM THE TRANSFORMER (ITEM 8)

| TO | ITEM 9 | COLOR |
|---|---|---|
| IEC CONNECTOR (L) | 7 | BLACK |
| IEC CONNECTOR (N) | 7 | BLACK |
| IEC CONNECTOR (GND) | 7 | GREEN /YELLOW |
| OUTOUT WIRE (WHITE) | - | RED |
| OUTPUT WIRE (BLACK) | - | RED |

| REV | DESCRIPTION | ECO | CHK'D | DATE | APPD |
|---|---|---|---|---|---|
| B | REVISED REVISED ADDED RELEASED | [illegible] | DBG | 9 21 94 | BJW |
| C | ADDED ITEM 18 | [illegible] | DBG | 9 25 94 | BJW |
| D | ADDED "LABEL" - CHANGED Sht 1 TO Zone 2 RELOCATED ITEM 10 CALL OUT FLIPPED 3D VIEW | [illegible] | DBG | 9 28 94 | BJW |

| | |
|---|---|
| THIS DWG - 506R | POWER SUPPLY - AUSTRALIA |
| THIS DWG - 504R | POWER SUPPLY - UK |
| THIS DWG - 502R | POWER SUPPLY ASSEMBLY - EUROPE |
| THIS DWG - 501R | POWER SUPPLY ASSEMBLY - DOMESTIC |
| PART NUMBER | DESCRIPTION |
| PART NO 661015 ASM | DESCRIPTION |

| | | | |
|---|---|---|---|
| MATERIAL N/A | DRAWN | DATE | |
| | BMF | 12 29 93 | Welc: Adp. |
| FINISH N/A | DESIGNED | | TITLE |
| | BMF | 12 29 93 | ASS'Y POWER SUPPLY |
| | CHECKED | | |
| UNLESS OTHERWISE SPECIFIED DIMENSIONS ARE IN INCHES AND INCLUDE PLATING TOLERANCES: XX ± 0.03 ANGLES ±1/2° .XXX ± 0.010 .XXXX ± 0.005 TOLERANCES PER ANSI Y14.5 REMOVE BURRS & SHARP EDGES EXTERNAL THDS = CLASS 2A INTERNAL THDS = CLASS 2B | APPROVED | | CODE IDENT 06695 D DRAWING NO 661015 REV D |
| | BJW | 6 29 94 | |
| | REL TO PROD | | SCALE DO NOT SCALE SHEET 1 OF 1 |
| | ROS | 6 30 94 | 1 000 |

# APPENDIX BB

## WIRING DIAGRAM/SCHEMATIC LS200

schematic dwg#441048
wiring diagram dwg#441114

| REV | DESCRIPTION | ECN | INIT | DATE | APPROVAL |
|---|---|---|---|---|---|
| A | RELEASE TO PRODUCTION ENGINEERING | 28352 | TQN | 5/2/94 | TQN |

# LS200 EXAM LIGHT WIRING DIAGRAM

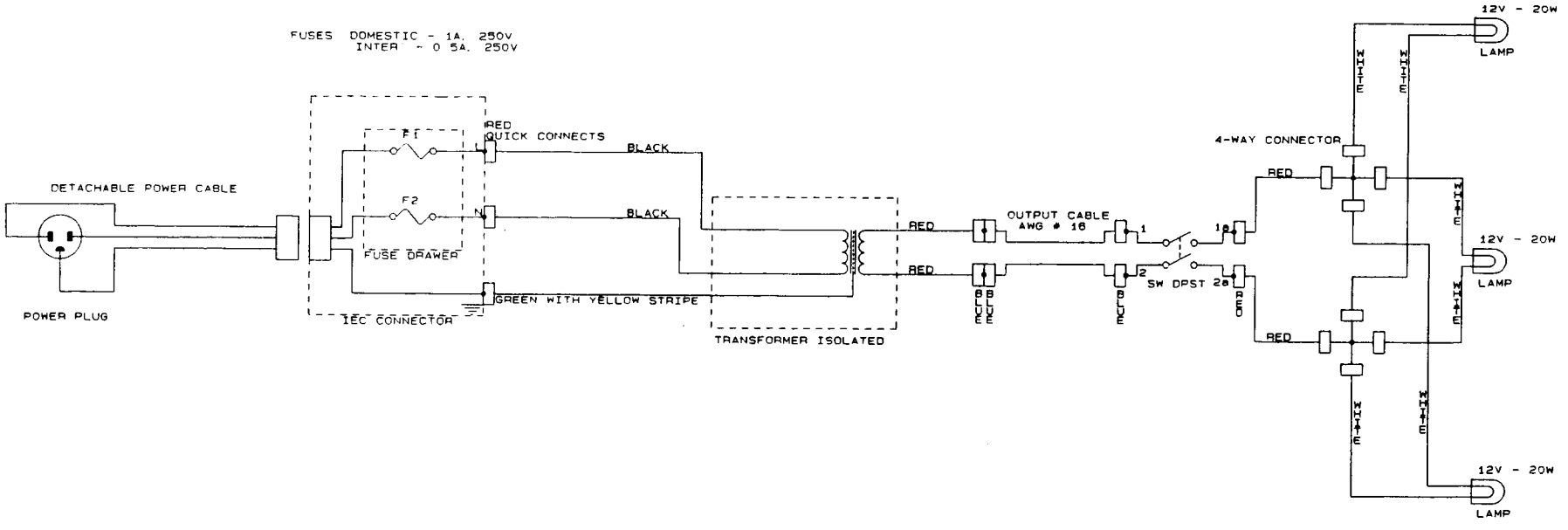


| | | |
|---|---|---|
| DRAWN | TQN | DATE: 3/10/94 |
| CHECKED | CCF | DATE: 3/25/94 |
| APPROVED | TQN | DATE: 3/28/94 |
| RELEASED TO PRODUCTION | RDS | DATE: |

WELCH ALLYN, INC

ORCAD FILE: 441114A1.SCH
PLOT: 441114A1.PLT
LIBRARY: 441114A1.LIB

Title: LS200 WIRING DIAGRAM

| Size | Document Number | REV |
|---|---|---|
| B | 441114 | A |

Date: May 2, 1994 Sheet of

# LS200 TASK LIGHT ELECTRICAL SCHEMATICS

| REV | DESCRIPTION | ECN | INIT | DATE | APPROVAL |
|---|---|---|---|---|---|
| A | RELEASE TO PRODUCTION ENGINEERING | S-27991 | TQN | 2-18-94 | TQN |
| B | ADDED DASH-LINE BOX TO ENCLOSE TRANSFORMER AND THERMAL FUSE IN INTERNATIONAL MODEL | S-28352 | TQN | 5-2-94 | TQN |

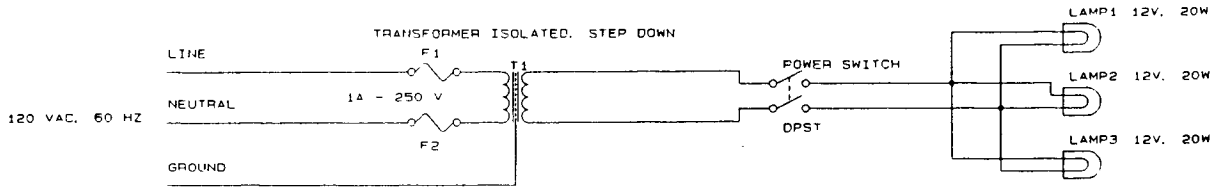


DOMESTIC

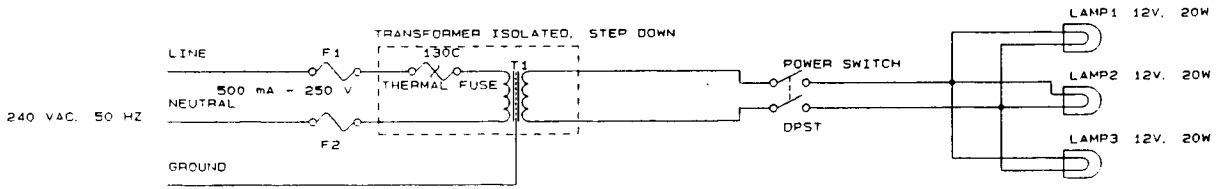


INTERNATIONAL

NOTES:

1 ORCAD FILENAME 44104881 SCH

| | | |
|---|---|---|
| DRAWN | TQN | DATE: 1-25-94 |
| CHECKED | CCF | DATE: 3-3-94 |
| APPROVED | TQN | DATE: 2-18-94 |
| RELEASED FOR PRODUCTION | RDS | DATE: 3-4-94 |

WELCH ALLYN, INC.

SCHEMATIC: 44104881.SCH
LIBRARY: 44104881.LIB
PLOT: 44104881.PLT

Title
LS200 TASK LIGHT ELECTRICAL SCHEMATICS

| Size | Document Number | REV |
|---|---|---|
| B | 441048 | B |

Date: May 2, 1994 Sheet 1 of 1

# APPENDIX CC

The following items or their equivalent are required for the complete repair and testing of the LS200 Halogen Light:

## COMMON TOOLS:

| Item: | Description: |
|---|---|
| 1. | Screwdriver: Phillips #1 |
| 2. | Screwdriver: Phillips #2 |
| 3. | Screwdriver: 7/32" 5.5mm Flat Blade |
| 4. | Strain relief tool HEYCO no.29 |
| 5. | Pliers, long nose: Xcelite 51CG |
| 6. | Pliers, crimping: Klein 1005 |
| 7. | Pliers, slip joint, Channel Lock # 420 |
| 8. | Wire cutter: Xcelite 107CG |
| 9. | Wire stripper: Xcelite 105SCG |
| 10. | Hex key set |
| 11. | Volt-Ohm Meter (with input impedance above 1 megohm) EX.BECKMAN 330 |
| 12. | Alligator test leads kit |
| 13. | Open end wrench,15/60 degree 15/16" |
| 14 | Heat shrink gun. |
| 15. | 3/8" Nut driver |

## SPECIAL WELCH ALLYN TOOLS:

| ITEM: | | |
|---|---|---|
| 1. | Spring tensioning tool | T-12686 |
| 2. | Chatillion gage | T-7047-2 |
| 3. | Holding fixture for arm and Support fixture for Luminaire | T-13403 |
| 4. | Front transformer housing nest | T-12930 |
| 5. | Tinnerman clip tool | T-12643 |
| 6. | Two degree tilt universal connector fixture | T-13414 |

## MATERIALS:

| ITEM: | DESCRIPTION: | W/A Part #: |
|---|---|---|
| 1. | Loctite #242 | M30338 |
| | USED ON PIVOT NUT INSIDE LUMINAIRE | |
| 2 | Loctite #222 | M30375 |
| | USED ON LONG ARM SET SCREW | |
| 3. | Loctite #403 | M30372 |
| 4. | Loctite Primer #770 | M30391 |
| | ITEMS 3 AND 4 USED ON JOINT #3, MAIN HINGE. | |
| 5. | Dow Corning #7 release compound | M11175 |
| | USED ON CONTACT SURFACES BETWEEN YOKE AND LUMINAIRE. | |

# APPENDIX DD

## PRODUCT UP-DATES

FILE ALL UP-DATES IN THIS SECTION. MAKE THE APPROPRIATE CHANGES IN THE MANUAL PERTAINING TO THESE UP-DATES.

APPENDIX EE

PRODUCT DESCRIPTION LS200
PROCEDURE LIGHT

The LS200 is a halogen procedure light with two mounting options...mobile stand and wall mount. It is used for routine medical examinations and as such can be positioned in a variety of positions. The light housing is manufactured of injection molded plastic which minimizes surface temperature. Light is provided by three quartz halogen lamps rated at 12 volts and 20 Watts each. The power source for the LS200 is standard A.C. for the country it is sold into. Two power sources are available for the LS200: Domestic 120 VAC/60 Hz and International 240 VAC/50Hz. The secondary, or lamp voltage is 12 VAC. All models use the same 20 watt halogen lamp PN 06400. Lamp current is switched by a Double Pole Single Throw (DPST) switch. The transformer is energized whenever the power cord is plugged into an active AC outlet (when fuse drawer contains two good fuses).

Please refer to the Owner's Manual PN 441118-1ML "Set-Up and operation" to become familiar with the LS200.

This product is designed and manufactured to strict specifications and safety regulations for medical products, and should be serviced by Welch Allyn trained technicians only.